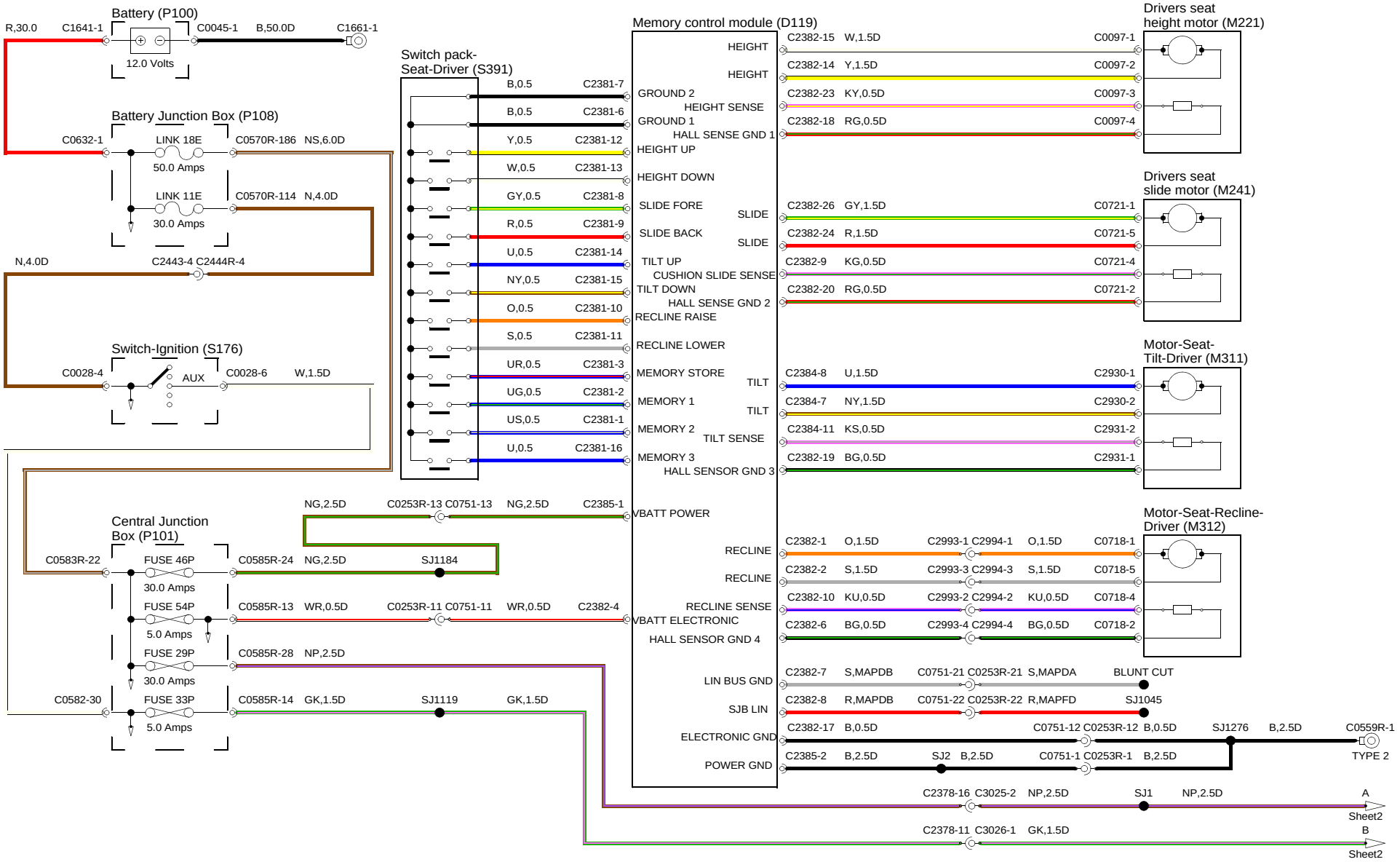
Battery (P100)
R,30.0
C1641-1
C0045-1
B,50.0D
C1661-1
12.0 Volts
Battery Junction Box (P108)
C0632-1
LINK 18E
C0570R-186
NS,6.0D
50.0 Amps
LINK 11E
C0570R-114
N,4.0D
30.0 Amps
N,4.0D
C2443-4 C2444R-4
Switch-Ignition (S176)
C0028-4
AUX
C0028-6
W,1.5D
Central Junction Box (P101)
C0583R-22
FUSE 46P
30.0 Amps
C0585R-24
NG,2.5D
SJ1184
FUSE 54P
5.0 Amps
C0585R-13
WR,0.5D
C0253R-11 C0751-11
WR,0.5D
C2382-4
FUSE 29P
30.0 Amps
C0585R-28
NP,2.5D
C0582-30
FUSE 33P
5.0 Amps
C0585R-14
GK,1.5D
SJ1119
GK,1.5D
NG,2.5D
C0253R-13 C0751-13
NG,2.5D
C2385-1
Switch pack-
Seat-Driver (S391)
B,0.5 C2381-7
B,0.5 C2381-6
Y,0.5 C2381-12
W,0.5 C2381-13
GY,0.5 C2381-8
R,0.5 C2381-9
U,0.5 C2381-14
NY,0.5 C2381-15
O,0.5 C2381-10
S,0.5 C2381-11
UR,0.5 C2381-3
UG,0.5 C2381-2
US,0.5 C2381-1
U,0.5 C2381-16
Memory control module (D119)
HEIGHT
HEIGHT
GROUND 2
HEIGHT SENSE
GROUND 1
HALL SENSE GND 1
HEIGHT UP
HEIGHT DOWN
SLIDE FORE
SLIDE
SLIDE BACK
SLIDE
TILT UP
CUSHION SLIDE SENSE
TILT DOWN
HALL SENSE GND 2
RECLINE RAISE
RECLINE LOWER
MEMORY STORE
TILT
MEMORY 1
TILT
MEMORY 2
TILT SENSE
MEMORY 3
HALL SENSOR GND 3
VBATT POWER
RECLINE
RECLINE
RECLINE SENSE
VBATT ELECTRONIC
HALL SENSOR GND 4
LIN BUS GND
SJB LIN
ELECTRONIC GND
POWER GND
Drivers seat
height motor (M221)
C2382-15 W,1.5D C0097-1
C2382-14 Y,1.5D C0097-2
C2382-23 KY,0.5D C0097-3
C2382-18 RG,0.5D C0097-4
Drivers seat
slide motor (M241)
C2382-26 GY,1.5D C0721-1
C2382-24 R,1.5D C0721-5
C2382-9 KG,0.5D C0721-4
C2382-20 RG,0.5D C0721-2
Motor-Seat-
Tilt-Driver (M311)
C2384-8 U,1.5D C2930-1
C2384-7 NY,1.5D C2930-2
C2384-11 KS,0.5D C2931-2
C2382-19 BG,0.5D C2931-1
Motor-Seat-Recline-
Driver (M312)
C2382-1 O,1.5D C2993-1 C2994-1 O,1.5D C0718-1
C2382-2 S,1.5D C2993-3 C2994-3 S,1.5D C0718-5
C2382-10 KU,0.5D C2993-2 C2994-2 KU,0.5D C0718-4
C2382-6 BG,0.5D C2993-4 C2994-4 BG,0.5D C0718-2
C2382-7 S,MAPDB C0751-21 C0253R-21 S,MAPDA BLUNT CUT
C2382-8 R,MAPDB C0751-22 C0253R-22 R,MAPFD SJ1045
C2382-17 B,0.5D C0751-12 C0253R-12 B,0.5D SJ1276 B,2.5D C0559R-1
TYPE 2
C2385-2 B,2.5D SJ2 B,2.5D C0751-1 C0253R-1 B,2.5D
C2378-16 C3025-2 NP,2.5D SJ1 NP,2.5D A
Sheet2
C2378-11 C3026-1 GK,1.5D B
Sheet2

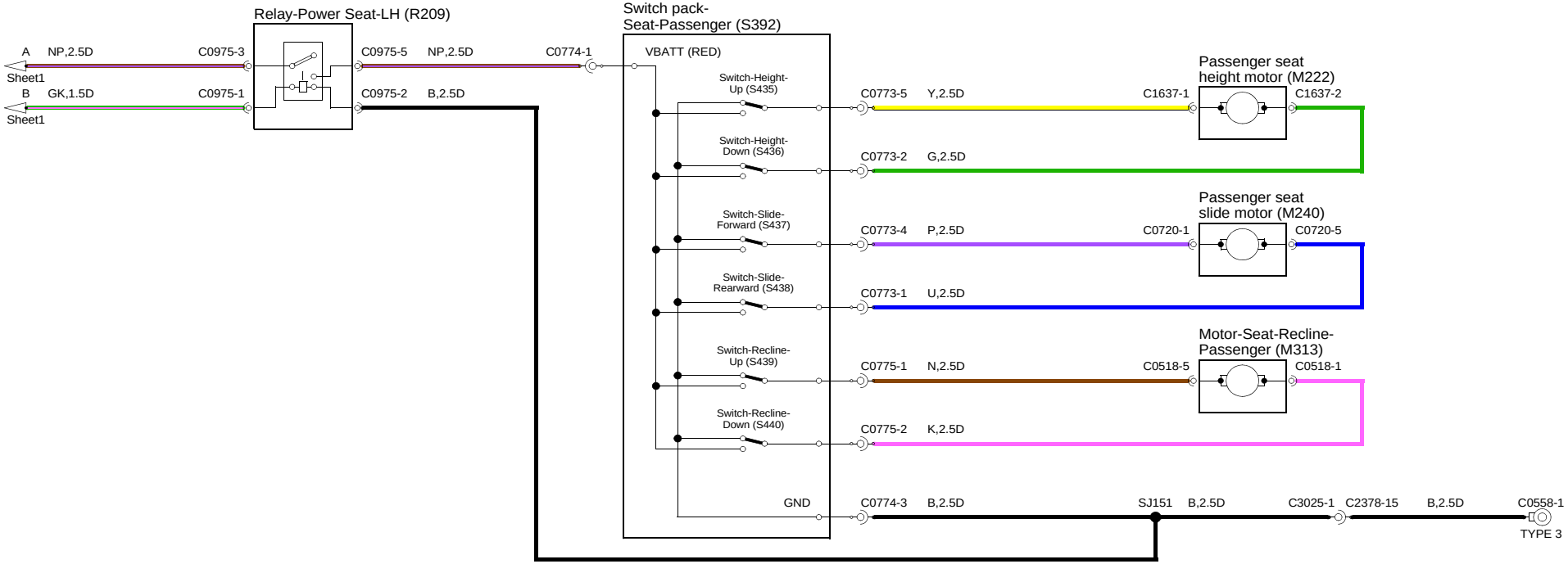
Relay-Power Seat-LH (R209)
Switch pack-
Seat-Passenger (S392)
A NP,2.5D
Sheet1
B GK,1.5D
Sheet1
C0975-3
C0975-1
C0975-5 NP,2.5D
C0975-2 B,2.5D
C0774-1
VBATT (RED)
Switch-Height-
Up (S435)
Switch-Height-
Down (S436)
Switch-Slide-
Forward (S437)
Switch-Slide-
Rearward (S438)
Switch-Recline-
Up (S439)
Switch-Recline-
Down (S440)
GND
C0773-5 Y,2.5D
C0773-2 G,2.5D
C0773-4 P,2.5D
C0773-1 U,2.5D
C0775-1 N,2.5D
C0775-2 K,2.5D
C0774-3 B,2.5D
Passenger seat
height motor (M222)
C1637-1
C1637-2
Passenger seat
slide motor (M240)
C0720-1
C0720-5
Motor-Seat-Recline-
Passenger (M313)
C0518-5
C0518-1
SJ151 B,2.5D
C3025-1 C2378-15 B,2.5D
C0558-1
TYPE 3

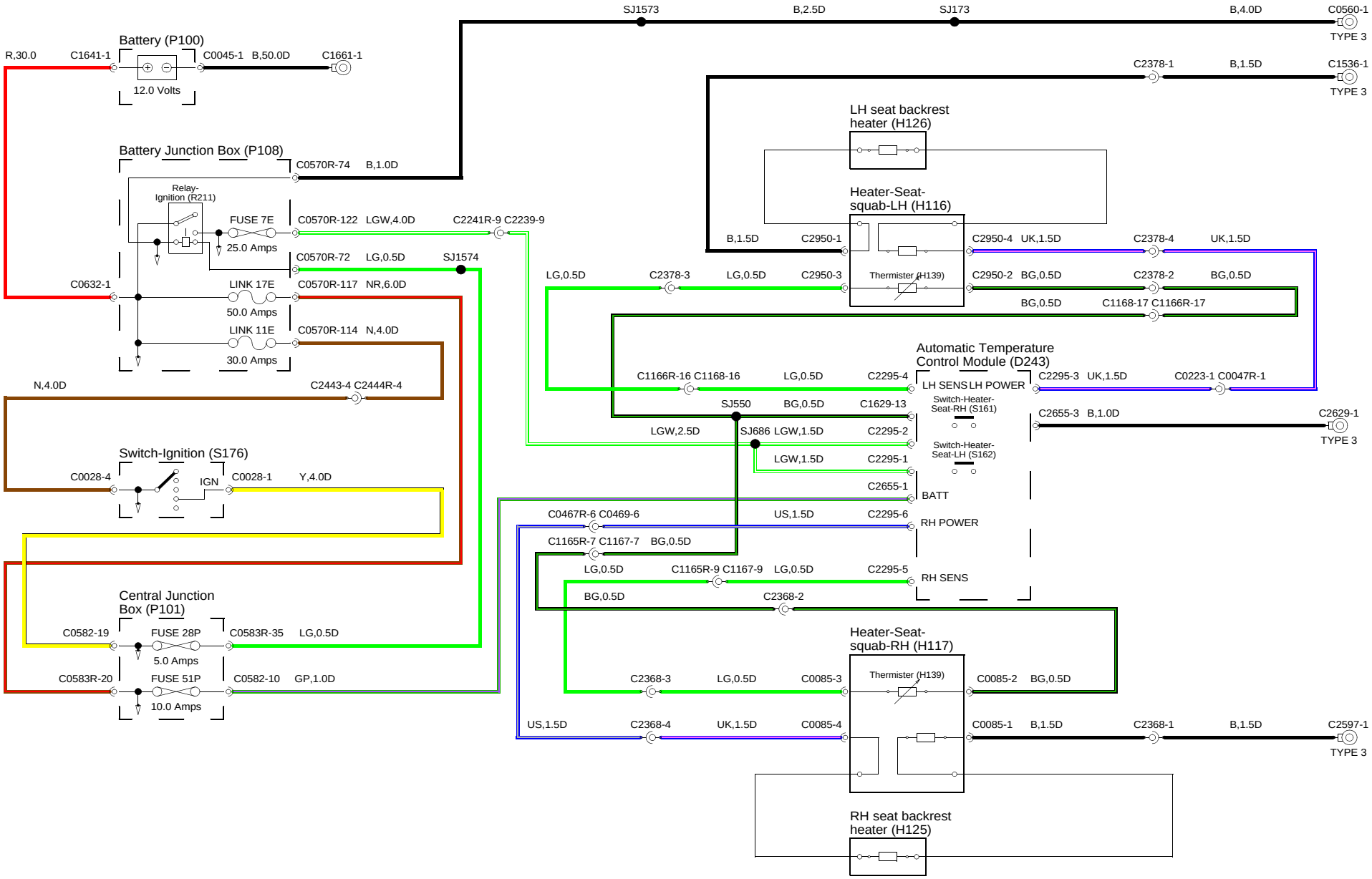
Battery (P100)
R,30.0
C1641-1
C0045-1 B,50.0D
C1661-1
12.0 Volts
Battery Junction Box (P108)
C0570R-74 B,1.0D
Relay-
Ignition (R211)
FUSE 7E
25.0 Amps
C0570R-122 LGW,4.0D
C2241R-9 C2239-9
C0570R-72 LG,0.5D
SJ1574
C0632-1
LINK 17E
50.0 Amps
C0570R-117 NR,6.0D
LINK 11E
30.0 Amps
C0570R-114 N,4.0D
N,4.0D
C2443-4 C2444R-4
Switch-Ignition (S176)
C0028-4
IGN
C0028-1 Y,4.0D
Central Junction
Box (P101)
C0582-19
FUSE 28P
5.0 Amps
C0583R-35 LG,0.5D
C0583R-20
FUSE 51P
10.0 Amps
C0582-10 GP,1.0D
SJ1573
B,2.5D
SJ173
B,4.0D
C0560-1
TYPE 3
C2378-1 B,1.5D
C1536-1
TYPE 3
LH seat backrest
heater (H126)
Heater-Seat-
squab-LH (H116)
B,1.5D C2950-1
C2950-4 UK,1.5D
C2378-4 UK,1.5D
LG,0.5D C2378-3 LG,0.5D C2950-3
Thermister (H139)
C2950-2 BG,0.5D
C2378-2 BG,0.5D
BG,0.5D C1168-17 C1166R-17
Automatic Temperature
Control Module (D243)
C1166R-16 C1168-16 LG,0.5D C2295-4
LH SENS LH POWER
C2295-3 UK,1.5D
C0223-1 C0047R-1
SJ550 BG,0.5D C1629-13
Switch-Heater-
Seat-RH (S161)
C2655-3 B,1.0D
C2629-1
TYPE 3
LGW,2.5D SJ686 LGW,1.5D C2295-2
Switch-Heater-
Seat-LH (S162)
LGW,1.5D C2295-1
C2655-1
BATT
C0467R-6 C0469-6 US,1.5D C2295-6
RH POWER
C1165R-7 C1167-7 BG,0.5D
LG,0.5D C1165R-9 C1167-9 LG,0.5D C2295-5
RH SENS
BG,0.5D C2368-2
Heater-Seat-
squab-RH (H117)
C2368-3 LG,0.5D C0085-3
Thermister (H139)
C0085-2 BG,0.5D
US,1.5D C2368-4 UK,1.5D C0085-4
C0085-1 B,1.5D
C2368-1 B,1.5D
C2597-1
TYPE 3
RH seat backrest
heater (H125)

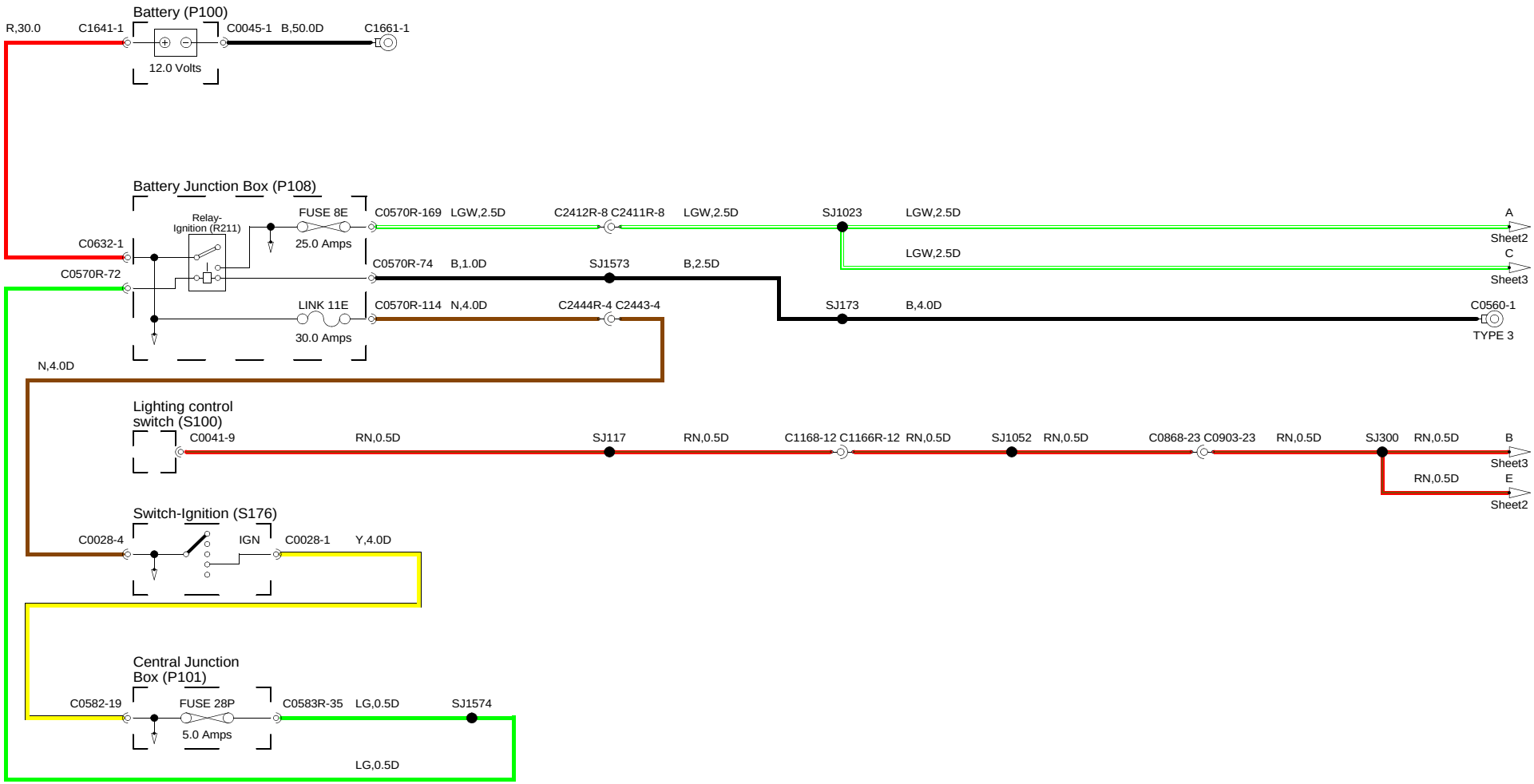
Battery (P100)
R,30.0
C1641-1
C0045-1
B,50.0D
C1661-1
12.0 Volts
Battery Junction Box (P108)
Relay-
Ignition (R211)
FUSE 8E
25.0 Amps
C0632-1
C0570R-72
C0570R-169
LGW,2.5D
C2412R-8
C2411R-8
LGW,2.5D
SJ1023
LGW,2.5D
A
Sheet2
LGW,2.5D
C
Sheet3
C0570R-74
B,1.0D
SJ1573
B,2.5D
LINK 11E
30.0 Amps
C0570R-114
N,4.0D
C2444R-4
C2443-4
SJ173
B,4.0D
C0560-1
TYPE 3
N,4.0D
Lighting control
switch (S100)
C0041-9
RN,0.5D
SJ117
RN,0.5D
C1168-12
C1166R-12
RN,0.5D
SJ1052
RN,0.5D
C0868-23
C0903-23
RN,0.5D
SJ300
RN,0.5D
B
Sheet3
RN,0.5D
E
Sheet2
Switch-Ignition (S176)
C0028-4
IGN
C0028-1
Y,4.0D
Central Junction
Box (P101)
C0582-19
FUSE 28P
5.0 Amps
C0583R-35
LG,0.5D
SJ1574
LG,0.5D

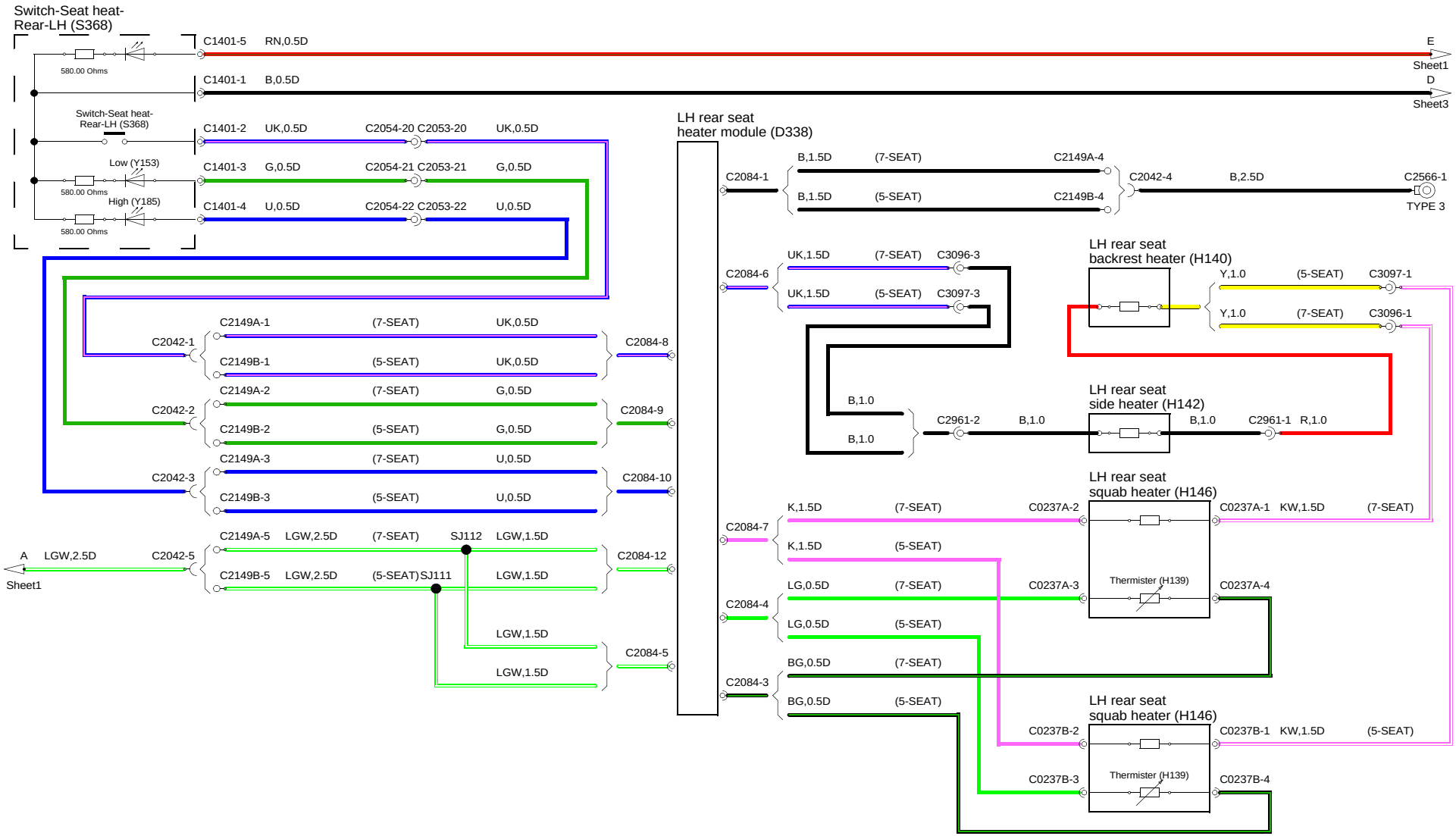
Switch-Seat heat-
Rear-LH (S368)
580.00 Ohms
C1401-5 RN,0.5D
E
Sheet1
C1401-1 B,0.5D
D
Sheet3
Switch-Seat heat-
Rear-LH (S368)
C1401-2 UK,0.5D C2054-20 C2053-20 UK,0.5D
Low (Y153)
C1401-3 G,0.5D C2054-21 C2053-21 G,0.5D
High (Y185)
C1401-4 U,0.5D C2054-22 C2053-22 U,0.5D
LH rear seat
heater module (D338)
C2084-1
B,1.5D (7-SEAT) C2149A-4
B,1.5D (5-SEAT) C2149B-4
C2042-4 B,2.5D C2566-1
TYPE 3
C2084-6
UK,1.5D (7-SEAT) C3096-3
UK,1.5D (5-SEAT) C3097-3
LH rear seat
backrest heater (H140)
Y,1.0 (5-SEAT) C3097-1
Y,1.0 (7-SEAT) C3096-1
C2042-1
C2149A-1 (7-SEAT) UK,0.5D
C2149B-1 (5-SEAT) UK,0.5D
C2084-8
C2042-2
C2149A-2 (7-SEAT) G,0.5D
C2149B-2 (5-SEAT) G,0.5D
C2084-9
B,1.0
B,1.0
C2961-2 B,1.0
LH rear seat
side heater (H142)
B,1.0 C2961-1 R,1.0
C2042-3
C2149A-3 (7-SEAT) U,0.5D
C2149B-3 (5-SEAT) U,0.5D
C2084-10
LH rear seat
squab heater (H146)
C2084-7
K,1.5D (7-SEAT) C0237A-2
C0237A-1 KW,1.5D (7-SEAT)
K,1.5D (5-SEAT)
A LGW,2.5D C2042-5
Sheet1
C2149A-5 LGW,2.5D (7-SEAT) SJ112 LGW,1.5D
C2149B-5 LGW,2.5D (5-SEAT) SJ111 LGW,1.5D
C2084-12
LG,0.5D (7-SEAT) C0237A-3
Thermister (H139)
C0237A-4
C2084-4
LG,0.5D (5-SEAT)
LGW,1.5D
LGW,1.5D
C2084-5
BG,0.5D (7-SEAT)
C2084-3
BG,0.5D (5-SEAT)
LH rear seat
squab heater (H146)
C0237B-2
C0237B-1 KW,1.5D (5-SEAT)
C0237B-3
Thermister (H139)
C0237B-4

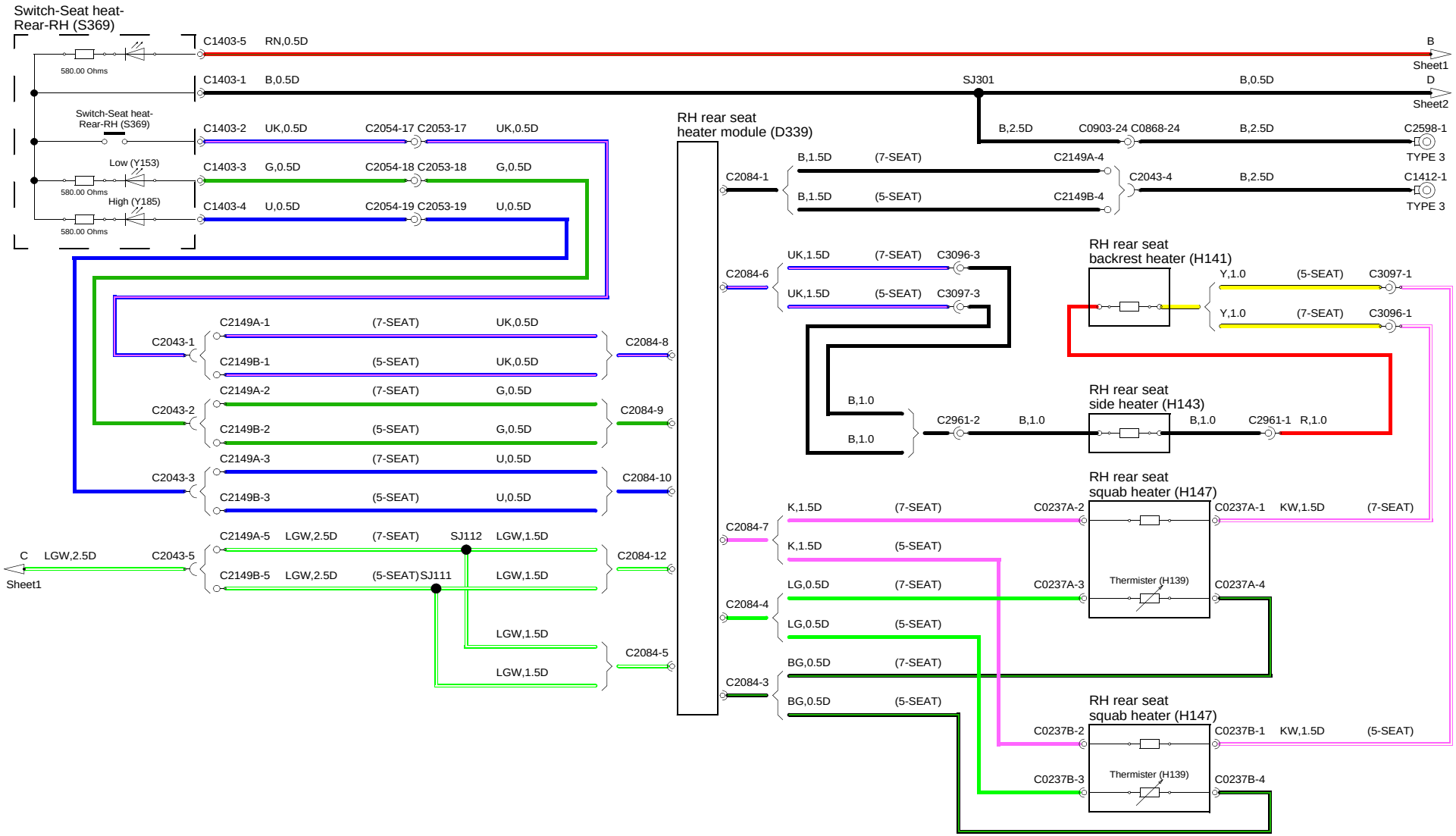
Switch-Seat heat-
Rear-RH (S369)
580.00 Ohms
C1403-5 RN,0.5D
B
Sheet1
C1403-1 B,0.5D
SJ301
B,0.5D
D
Sheet2
Switch-Seat heat-
Rear-RH (S369)
C1403-2 UK,0.5D
C2054-17 C2053-17 UK,0.5D
Low (Y153)
C1403-3 G,0.5D
C2054-18 C2053-18 G,0.5D
High (Y185)
C1403-4 U,0.5D
C2054-19 C2053-19 U,0.5D
RH rear seat
heater module (D339)
B,2.5D
C0903-24 C0868-24
B,2.5D
C2598-1
TYPE 3
C2084-1
B,1.5D (7-SEAT)
C2149A-4
B,1.5D (5-SEAT)
C2149B-4
C2043-4
B,2.5D
C1412-1
TYPE 3
C2084-6
UK,1.5D (7-SEAT)
C3096-3
UK,1.5D (5-SEAT)
C3097-3
RH rear seat
backrest heater (H141)
Y,1.0 (5-SEAT)
C3097-1
Y,1.0 (7-SEAT)
C3096-1
C2043-1
C2149A-1 (7-SEAT) UK,0.5D
C2149B-1 (5-SEAT) UK,0.5D
C2084-8
B,1.0
B,1.0
C2961-2
B,1.0
RH rear seat
side heater (H143)
B,1.0
C2961-1
R,1.0
C2043-2
C2149A-2 (7-SEAT) G,0.5D
C2149B-2 (5-SEAT) G,0.5D
C2084-9
C2043-3
C2149A-3 (7-SEAT) U,0.5D
C2149B-3 (5-SEAT) U,0.5D
C2084-10
RH rear seat
squab heater (H147)
C2084-7
K,1.5D (7-SEAT)
C0237A-2
C0237A-1
KW,1.5D
(7-SEAT)
K,1.5D (5-SEAT)
C2084-4
LG,0.5D (7-SEAT)
C0237A-3
Thermister (H139)
C0237A-4
LG,0.5D (5-SEAT)
C2084-3
BG,0.5D (7-SEAT)
BG,0.5D (5-SEAT)
RH rear seat
squab heater (H147)
C0237B-2
C0237B-1
KW,1.5D
(5-SEAT)
C0237B-3
Thermister (H139)
C0237B-4
C
LGW,2.5D
Sheet1
C2043-5
C2149A-5 LGW,2.5D (7-SEAT) SJ112 LGW,1.5D
C2149B-5 LGW,2.5D (5-SEAT) SJ111 LGW,1.5D
C2084-12
LGW,1.5D
LGW,1.5D
C2084-5