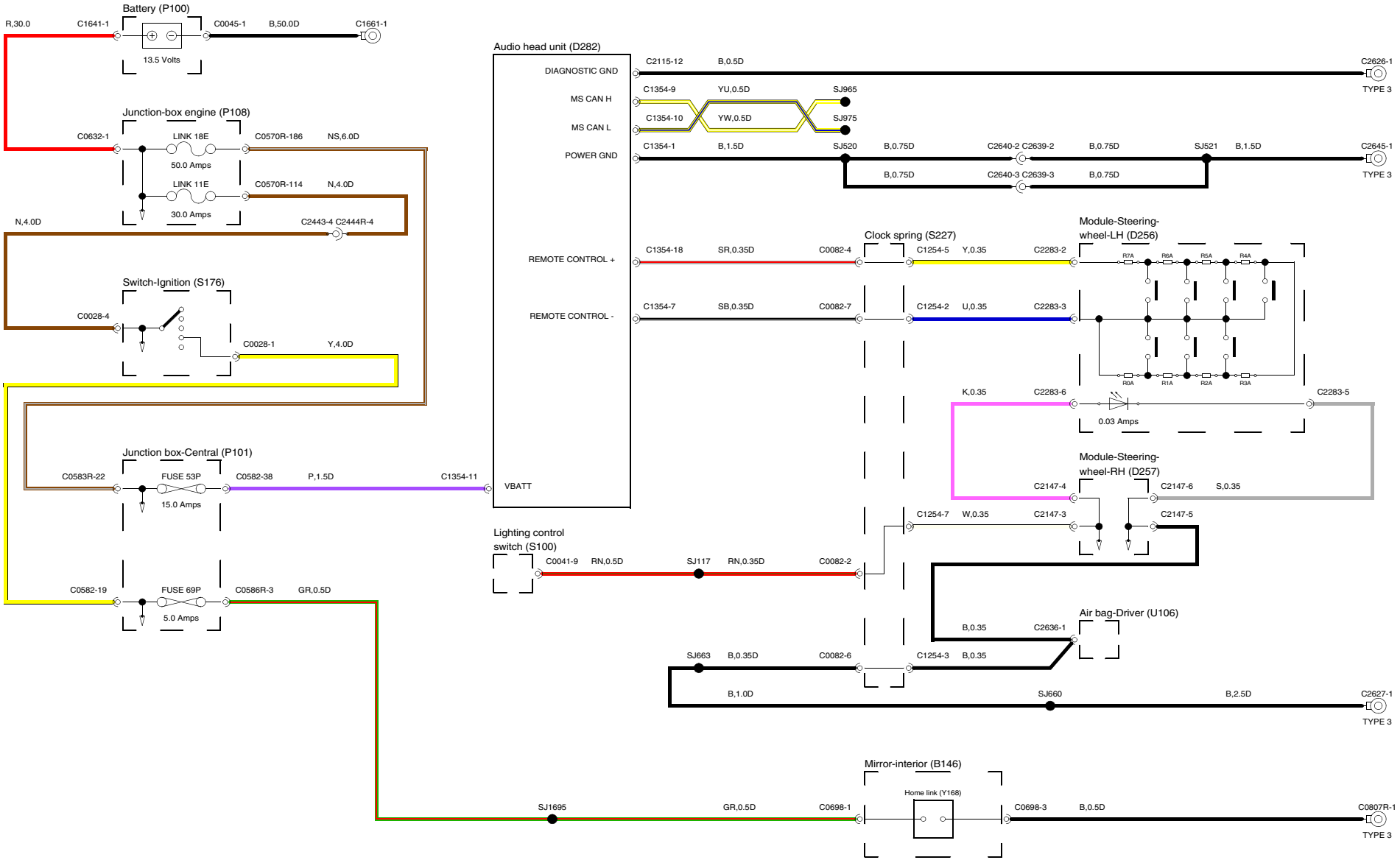
Battery (P100)
R,30.0
C1641-1
C0045-1
B,50.0D
C1661-1
13.5 Volts
Junction-box engine (P108)
C0632-1
LINK 18E
C0570R-186
NS,6.0D
50.0 Amps
LINK 11E
C0570R-114
N,4.0D
30.0 Amps
N,4.0D
C2443-4 C2444R-4
Switch-Ignition (S176)
C0028-4
C0028-1
Y,4.0D
Junction box-Central (P101)
C0583R-22
FUSE 53P
C0582-38
P,1.5D
C1354-11
15.0 Amps
C0582-19
FUSE 69P
C0586R-3
GR,0.5D
5.0 Amps
Audio head unit (D282)
DIAGNOSTIC GND
MS CAN H
MS CAN L
POWER GND
REMOTE CONTROL +
REMOTE CONTROL -
VBATT
C2115-12
B,0.5D
C2626-1
TYPE 3
C1354-9
YU,0.5D
SJ965
C1354-10
YW,0.5D
SJ975
C1354-1
B,1.5D
SJ520
B,0.75D
C2640-2 C2639-2
B,0.75D
SJ521
B,1.5D
C2645-1
TYPE 3
B,0.75D
C2640-3 C2639-3
B,0.75D
Clock spring (S227)
Module-Steering-wheel-LH (D256)
C1354-18
SR,0.35D
C0082-4
C1254-5
Y,0.35
C2283-2
R7A
R6A
R5A
R4A
C1354-7
SB,0.35D
C0082-7
C1254-2
U,0.35
C2283-3
R0A
R1A
R2A
R3A
K,0.35
C2283-6
C2283-5
0.03 Amps
Module-Steering-wheel-RH (D257)
C2147-4
C2147-6
S,0.35
C1254-7
W,0.35
C2147-3
C2147-5
Lighting control switch (S100)
C0041-9
RN,0.5D
SJ117
RN,0.35D
C0082-2
Air bag-Driver (U106)
B,0.35
C2636-1
SJ663
B,0.35D
C0082-6
C1254-3
B,0.35
B,1.0D
SJ660
B,2.5D
C2627-1
TYPE 3
Mirror-interior (B146)
Home link (Y168)
SJ1695
GR,0.5D
C0698-1
C0698-3
B,0.5D
C0807R-1
TYPE 3

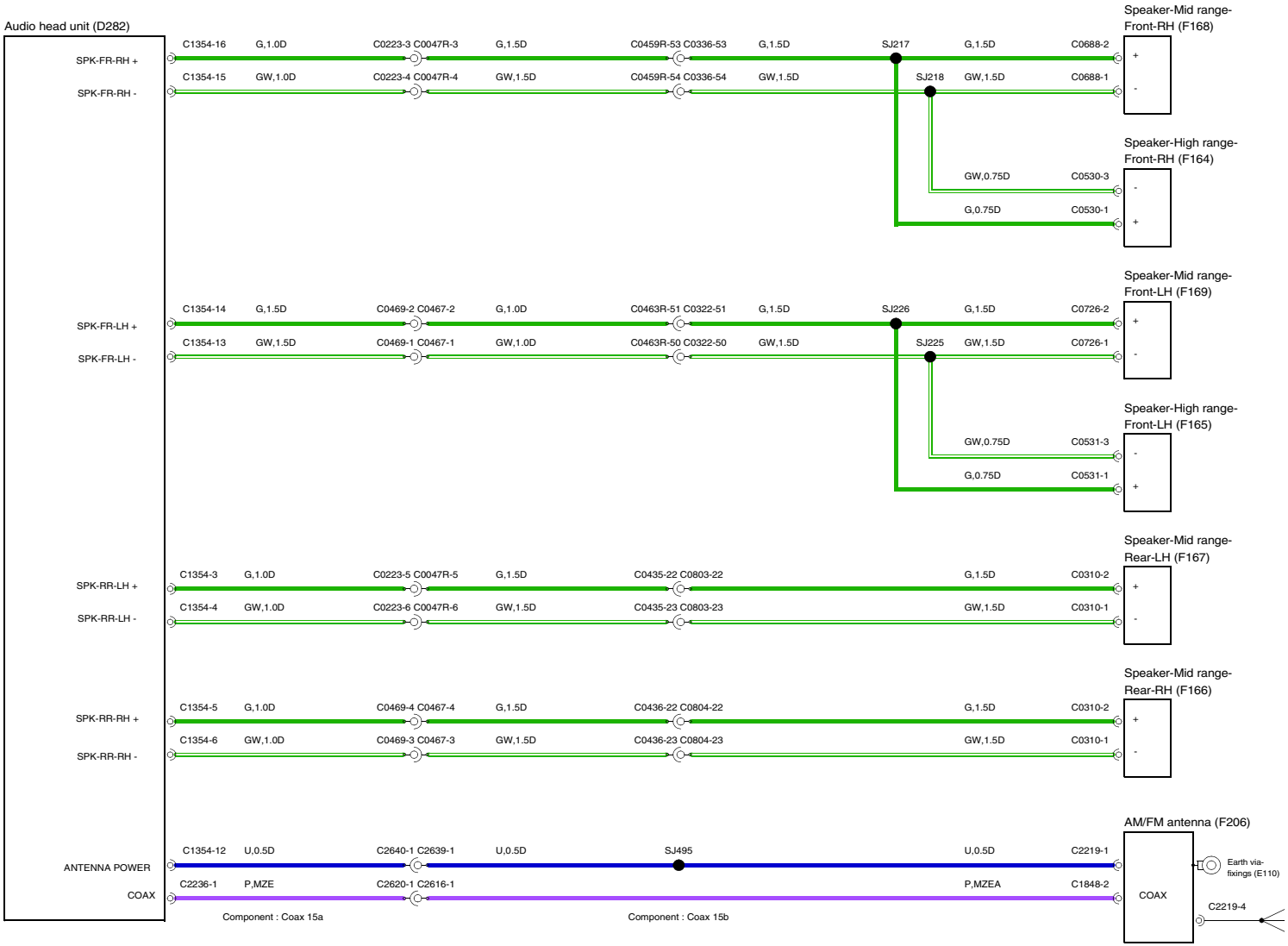
Audio head unit (D282)
SPK-FR-RH +
SPK-FR-RH -
SPK-FR-LH +
SPK-FR-LH -
SPK-RR-LH +
SPK-RR-LH -
SPK-RR-RH +
SPK-RR-RH -
ANTENNA POWER
COAX
C1354-16 G,1.0D C0223-3 C0047R-3 G,1.5D C0459R-53 C0336-53 G,1.5D SJ217 G,1.5D C0688-2
C1354-15 GW,1.0D C0223-4 C0047R-4 GW,1.5D C0459R-54 C0336-54 GW,1.5D SJ218 GW,1.5D C0688-1
Speaker-Mid range-Front-RH (F168)
GW,0.75D C0530-3
G,0.75D C0530-1
Speaker-High range-Front-RH (F164)
C1354-14 G,1.5D C0469-2 C0467-2 G,1.0D C0463R-51 C0322-51 G,1.5D SJ226 G,1.5D C0726-2
C1354-13 GW,1.5D C0469-1 C0467-1 GW,1.0D C0463R-50 C0322-50 GW,1.5D SJ225 GW,1.5D C0726-1
Speaker-Mid range-Front-LH (F169)
GW,0.75D C0531-3
G,0.75D C0531-1
Speaker-High range-Front-LH (F165)
C1354-3 G,1.0D C0223-5 C0047R-5 G,1.5D C0435-22 C0803-22 G,1.5D C0310-2
C1354-4 GW,1.0D C0223-6 C0047R-6 GW,1.5D C0435-23 C0803-23 GW,1.5D C0310-1
Speaker-Mid range-Rear-LH (F167)
C1354-5 G,1.0D C0469-4 C0467-4 G,1.5D C0436-22 C0804-22 G,1.5D C0310-2
C1354-6 GW,1.0D C0469-3 C0467-3 GW,1.5D C0436-23 C0804-23 GW,1.5D C0310-1
Speaker-Mid range-Rear-RH (F166)
C1354-12 U,0.5D C2640-1 C2639-1 U,0.5D SJ495 U,0.5D C2219-1
C2236-1 P,MZE C2620-1 C2616-1 P,MZEA C1848-2
Component : Coax 15a
Component : Coax 15b
AM/FM antenna (F206)
COAX
Earth via-fixings (E110)
C2219-4

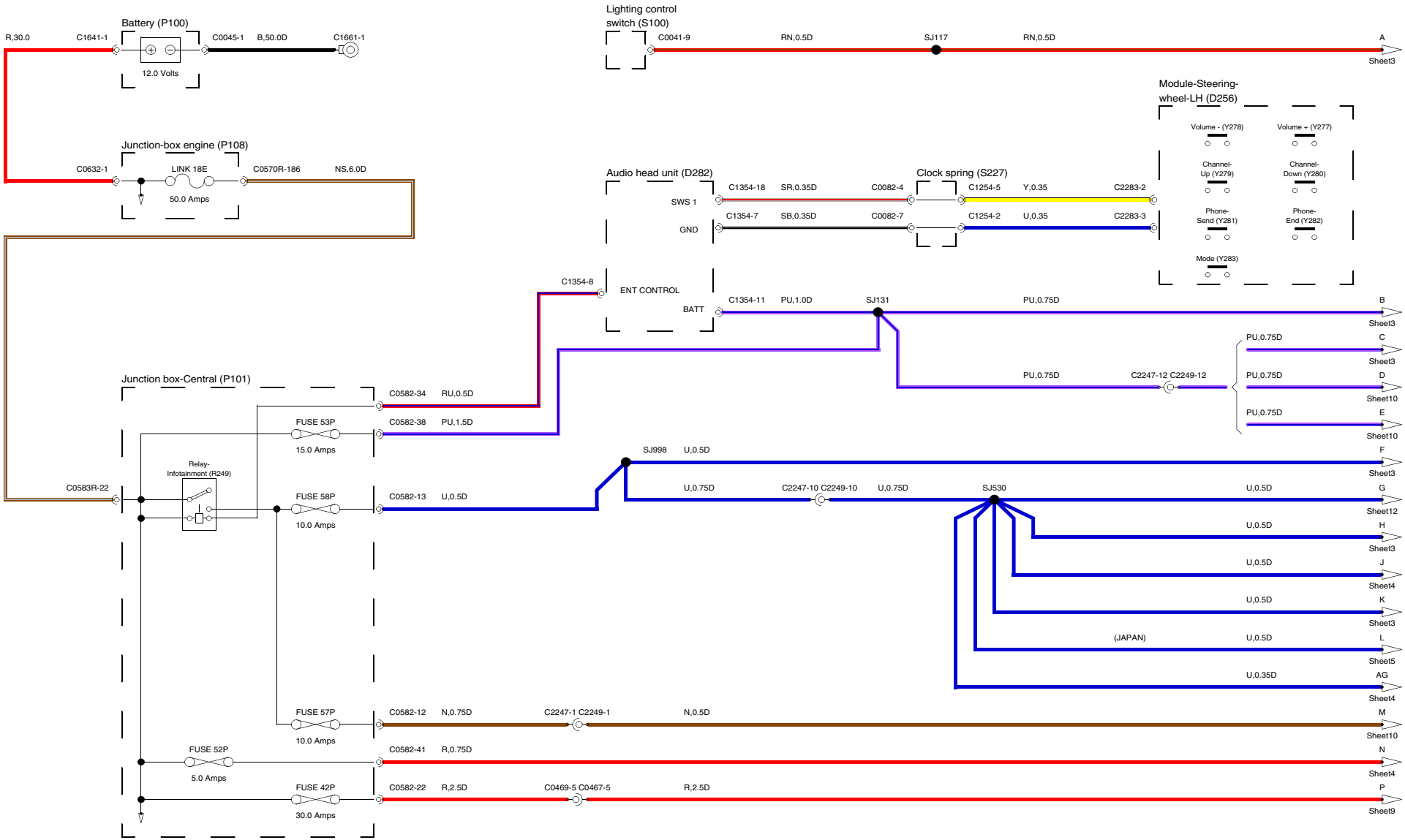
Battery (P100)
R,30.0
C1641-1
C0045-1
B,50.0D
C1661-1
12.0 Volts
Junction-box engine (P108)
C0632-1
LINK 18E
C0570R-186
NS,6.0D
50.0 Amps
Lighting control switch (S100)
C0041-9
RN,0.5D
SJ117
RN,0.5D
A
Sheet3
Module-Steering-wheel-LH (D256)
Volume - (Y278)
Volume + (Y277)
Channel-Up (Y279)
Channel-Down (Y280)
Phone-Send (Y281)
Phone-End (Y282)
Mode (Y283)
Audio head unit (D282)
SWS 1
GND
C1354-18
SR,0.35D
C0082-4
C1354-7
SB,0.35D
C0082-7
Clock spring (S227)
C1254-5
Y,0.35
C2283-2
C1254-2
U,0.35
C2283-3
C1354-8
ENT CONTROL
BATT
C1354-11
PU,1.0D
SJ131
PU,0.75D
B
Sheet3
PU,0.75D
C
Sheet3
PU,0.75D
C2247-12 C2249-12
PU,0.75D
D
Sheet10
PU,0.75D
E
Sheet10
Junction box-Central (P101)
C0582-34
RU,0.5D
FUSE 53P
15.0 Amps
C0582-38
PU,1.5D
Relay-Infotainment (R249)
C0583R-22
FUSE 58P
10.0 Amps
C0582-13
U,0.5D
SJ998
U,0.5D
F
Sheet3
U,0.75D
C2247-10 C2249-10
U,0.75D
SJ530
U,0.5D
G
Sheet12
U,0.5D
H
Sheet3
U,0.5D
J
Sheet4
U,0.5D
K
Sheet3
(JAPAN)
U,0.5D
L
Sheet5
U,0.35D
AG
Sheet4
FUSE 57P
10.0 Amps
C0582-12
N,0.75D
C2247-1 C2249-1
N,0.5D
M
Sheet10
FUSE 52P
5.0 Amps
C0582-41
R,0.75D
N
Sheet4
FUSE 42P
30.0 Amps
C0582-22
R,2.5D
C0469-5 C0467-5
R,2.5D
P
Sheet9

SCR,MQB
Audio head unit (D282)
AV input panel (D346)
C2249-14 C2247-14
R,0.5D
C2115-2
+
L
C2115-8
R,0.5D
C0223-12 C0047R-12
R,0.5D
C2053-13 C2054-13
R,0.5D
C2831-4
L
(NAV)
R
C2115-7
U,0.5D
C0223-10 C0047R-10
U,0.5D
C2053-14 C2054-14
U,0.5D
C2831-3
R
-VE
C2115-6
SCR,0.5D
C0223-11 C0047R-11
SCR,0.5D
C2053-15 C2054-15
SCR,0.5D
C2831-2
GND
C2249-15 C2247-15
B,0.5D
C2115-4
-
(NAV)
B,2.5D
SJ301
B,0.5D
C2831-5
C0903-24 C0868-24
B,2.5D
C2598-1
TYPE 3
C2249-16 C2247-16
C2115-1
SCR
(NAV)
GND
C2115-12
B,0.5D
C2626-1
TYPE 3
GND
C1354-1
B,1.5D
SJ520
B,0.75D
C2640-2 C2639-2
B,0.75D
SJ521
B,1.5D
C2645-1
TYPE 3
SJ965
YU,0.5D
C1354-9
CAN +
B,0.75D
C2640-3 C2639-3
B,0.75D
SJ975
YW,0.5D
C1354-10
CAN -
SCR,MQC
SJ693
SCR,MQA
R
Sheet3
B,MQC
SJ692
B,MQA
S
Sheet3
R,MQC
SJ691
R,MQA
T
Sheet3
Lamp-Interior-
Front (B100)
(NAV)
SCR,MQB
C0395-4 C0981-4
SCR,MQF
C0084R-19 C0610-19
SCR,MANF
BARE END
(NO NAV)
SCR,MANC
Microphone (F172)
B,0.5D
C0084R-17 C0610-17
B,0.5D
C1462-1
MIC -
(NAV)
B,MQB
R,0.5D
C0084R-18 C0610-18
R,0.5D
C1462-2
C0395-2 C0981-2
MIC +
(NO NAV)
B,MQE
(NAV)
R,MQB
C0395-3 C0981-3
(NO NAV)
R,MQE

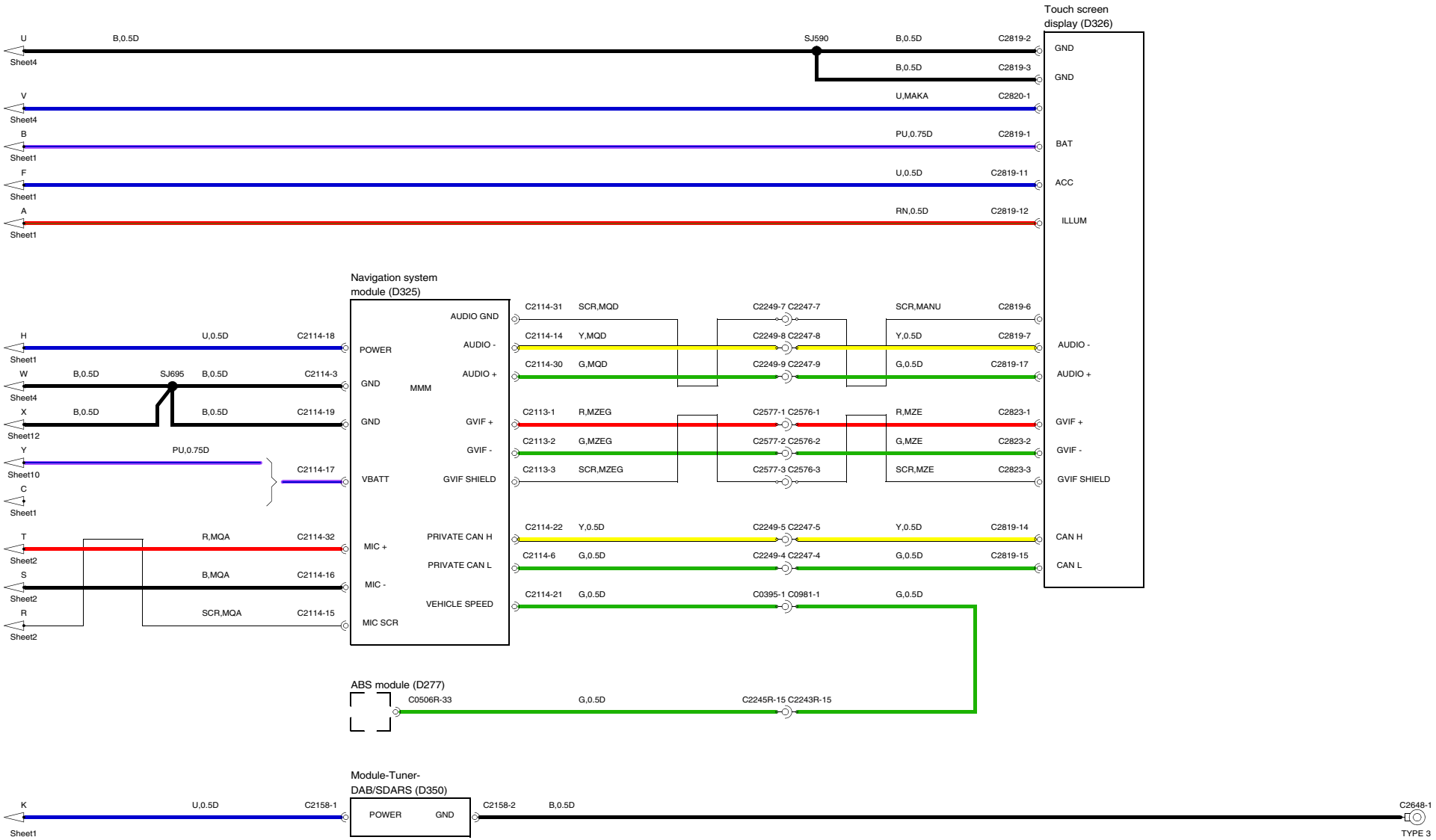
Touch screen display (D326)
U
B,0.5D
Sheet4
SJ590
B,0.5D
C2819-2
GND
B,0.5D
C2819-3
GND
V
Sheet4
U,MAKA
C2820-1
B
Sheet1
PU,0.75D
C2819-1
BAT
F
Sheet1
U,0.5D
C2819-11
ACC
A
Sheet1
RN,0.5D
C2819-12
ILLUM
Navigation system module (D325)
H
Sheet1
U,0.5D
C2114-18
POWER
W
Sheet4
B,0.5D
SJ695
B,0.5D
C2114-3
GND
MMM
X
Sheet12
B,0.5D
B,0.5D
C2114-19
GND
Y
Sheet10
PU,0.75D
C2114-17
VBATT
C
Sheet1
T
Sheet2
R,MQA
C2114-32
MIC +
S
Sheet2
B,MQA
C2114-16
MIC -
R
Sheet2
SCR,MQA
C2114-15
MIC SCR
AUDIO GND
AUDIO -
AUDIO +
GVIF +
GVIF -
GVIF SHIELD
PRIVATE CAN H
PRIVATE CAN L
VEHICLE SPEED
C2114-31
SCR,MQD
C2249-7 C2247-7
SCR,MANU
C2819-6
C2114-14
Y,MQD
C2249-8 C2247-8
Y,0.5D
C2819-7
AUDIO -
C2114-30
G,MQD
C2249-9 C2247-9
G,0.5D
C2819-17
AUDIO +
C2113-1
R,MZEG
C2577-1 C2576-1
R,MZE
C2823-1
GVIF +
C2113-2
G,MZEG
C2577-2 C2576-2
G,MZE
C2823-2
GVIF -
C2113-3
SCR,MZEG
C2577-3 C2576-3
SCR,MZE
C2823-3
GVIF SHIELD
C2114-22
Y,0.5D
C2249-5 C2247-5
Y,0.5D
C2819-14
CAN H
C2114-6
G,0.5D
C2249-4 C2247-4
G,0.5D
C2819-15
CAN L
C2114-21
G,0.5D
C0395-1 C0981-1
G,0.5D
ABS module (D277)
C0506R-33
G,0.5D
C2245R-15 C2243R-15
Module-Tuner-DAB/SDARS (D350)
K
Sheet1
U,0.5D
C2158-1
POWER
GND
C2158-2
B,0.5D
C2648-1
TYPE 3

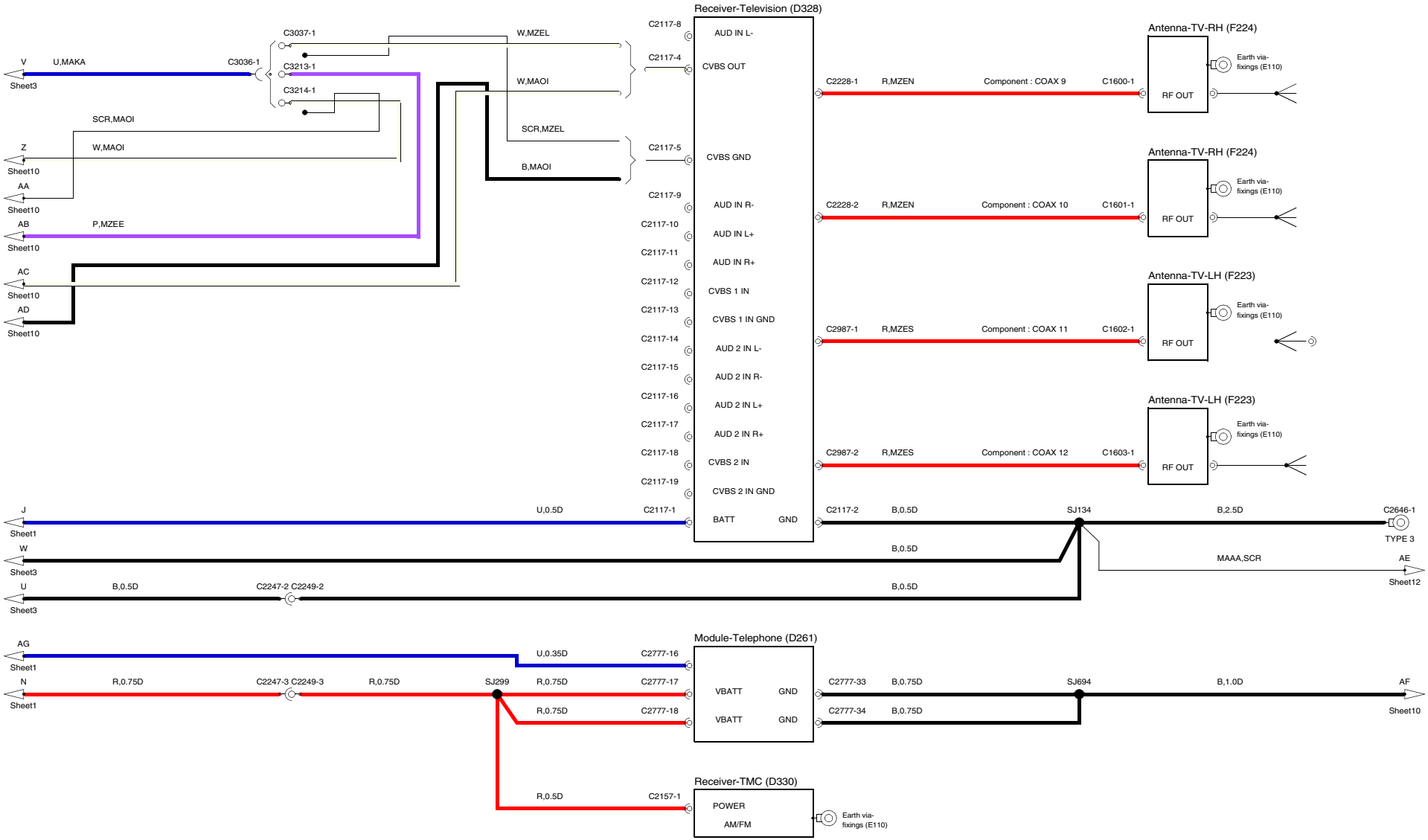
Receiver-Television (D328)
C2117-8
AUD IN L-
C2117-4
CVBS OUT
C2117-5
CVBS GND
C2117-9
AUD IN R-
C2117-10
AUD IN L+
C2117-11
AUD IN R+
C2117-12
CVBS 1 IN
C2117-13
CVBS 1 IN GND
C2117-14
AUD 2 IN L-
C2117-15
AUD 2 IN R-
C2117-16
AUD 2 IN L+
C2117-17
AUD 2 IN R+
C2117-18
CVBS 2 IN
C2117-19
CVBS 2 IN GND
C2117-1
BATT
GND
C3037-1
C3036-1
C3213-1
C3214-1
W,MZEL
W,MAOI
SCR,MZEL
B,MAOI
V
U,MAKA
Sheet3
SCR,MAOI
Z
W,MAOI
Sheet10
AA
Sheet10
AB
P,MZEE
Sheet10
AC
Sheet10
AD
Sheet10
Antenna-TV-RH (F224)
C2228-1
R,MZEN
Component : COAX 9
C1600-1
RF OUT
Earth via-fixings (E110)
Antenna-TV-RH (F224)
C2228-2
R,MZEN
Component : COAX 10
C1601-1
RF OUT
Earth via-fixings (E110)
Antenna-TV-LH (F223)
C2987-1
R,MZES
Component : COAX 11
C1602-1
RF OUT
Earth via-fixings (E110)
Antenna-TV-LH (F223)
C2987-2
R,MZES
Component : COAX 12
C1603-1
RF OUT
Earth via-fixings (E110)
J
Sheet1
U,0.5D
C2117-2
B,0.5D
SJ134
B,2.5D
C2646-1
TYPE 3
W
Sheet3
B,0.5D
MAAA,SCR
AE
Sheet12
U
Sheet3
B,0.5D
C2247-2 C2249-2
B,0.5D
AG
Sheet1
U,0.35D
C2777-16
Module-Telephone (D261)
N
Sheet1
R,0.75D
C2247-3 C2249-3
R,0.75D
SJ299
R,0.75D
C2777-17
VBATT
GND
C2777-33
B,0.75D
SJ694
B,1.0D
AF
Sheet10
R,0.75D
C2777-18
VBATT
GND
C2777-34
B,0.75D
Receiver-TMC (D330)
R,0.5D
C2157-1
POWER
AM/FM
Earth via-fixings (E110)

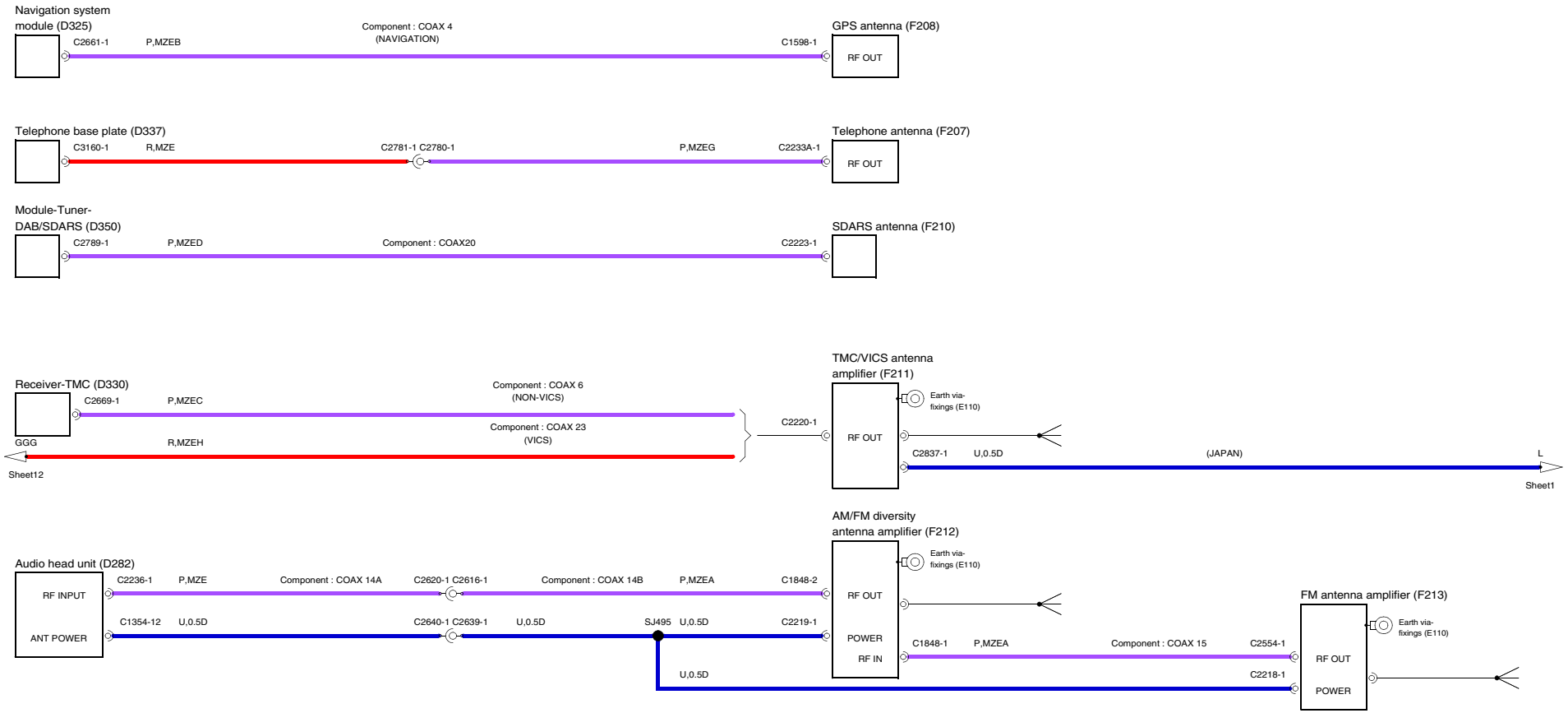
Navigation system module (D325)
C2661-1
P,MZEB
Component : COAX 4 (NAVIGATION)
C1598-1
GPS antenna (F208)
RF OUT
Telephone base plate (D337)
C3160-1
R,MZE
C2781-1 C2780-1
P,MZEG
C2233A-1
Telephone antenna (F207)
RF OUT
Module-Tuner-DAB/SDARS (D350)
C2789-1
P,MZED
Component : COAX20
C2223-1
SDARS antenna (F210)
Receiver-TMC (D330)
C2669-1
P,MZEC
Component : COAX 6 (NON-VICS)
GGG
R,MZEH
Component : COAX 23 (VICS)
Sheet12
C2220-1
TMC/VICS antenna amplifier (F211)
RF OUT
Earth via-fixings (E110)
C2837-1
U,0.5D
(JAPAN)
L
Sheet1
AM/FM diversity antenna amplifier (F212)
Audio head unit (D282)
RF INPUT
ANT POWER
C2236-1
P,MZE
Component : COAX 14A
C2620-1 C2616-1
Component : COAX 14B
P,MZEA
C1848-2
C1354-12
U,0.5D
C2640-1 C2639-1
U,0.5D
SJ495
U,0.5D
C2219-1
RF OUT
POWER
RF IN
Earth via-fixings (E110)
C1848-1
P,MZEA
Component : COAX 15
C2554-1
U,0.5D
C2218-1
FM antenna amplifier (F213)
RF OUT
POWER
Earth via-fixings (E110)

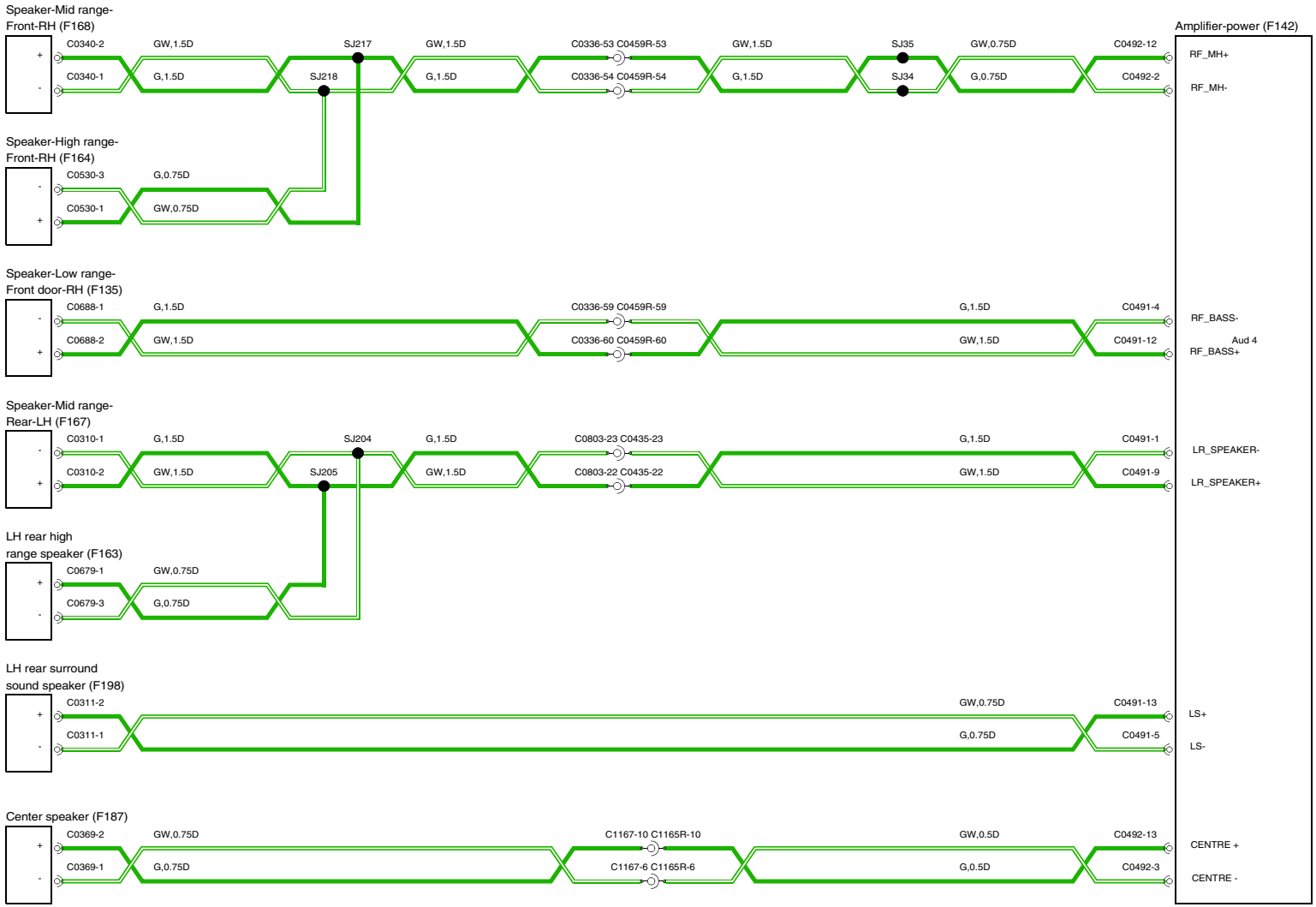
Speaker-Mid range-
Front-RH (F168)
Amplifier-power (F142)
C0340-2
GW,1.5D
SJ217
GW,1.5D
C0336-53 C0459R-53
GW,1.5D
SJ35
GW,0.75D
C0492-12
RF_MH+
C0340-1
G,1.5D
SJ218
G,1.5D
C0336-54 C0459R-54
G,1.5D
SJ34
G,0.75D
C0492-2
RF_MH-
Speaker-High range-
Front-RH (F164)
C0530-3
G,0.75D
C0530-1
GW,0.75D
Speaker-Low range-
Front door-RH (F135)
C0688-1
G,1.5D
C0336-59 C0459R-59
G,1.5D
C0491-4
RF_BASS-
C0688-2
GW,1.5D
C0336-60 C0459R-60
GW,1.5D
C0491-12
Aud 4
RF_BASS+
Speaker-Mid range-
Rear-LH (F167)
C0310-1
G,1.5D
SJ204
G,1.5D
C0803-23 C0435-23
G,1.5D
C0491-1
LR_SPEAKER-
C0310-2
GW,1.5D
SJ205
GW,1.5D
C0803-22 C0435-22
GW,1.5D
C0491-9
LR_SPEAKER+
LH rear high
range speaker (F163)
C0679-1
GW,0.75D
C0679-3
G,0.75D
LH rear surround
sound speaker (F198)
C0311-2
GW,0.75D
C0491-13
LS+
C0311-1
G,0.75D
C0491-5
LS-
Center speaker (F187)
C0369-2
GW,0.75D
C1167-10 C1165R-10
GW,0.5D
C0492-13
CENTRE +
C0369-1
G,0.75D
C1167-6 C1165R-6
G,0.5D
C0492-3
CENTRE -

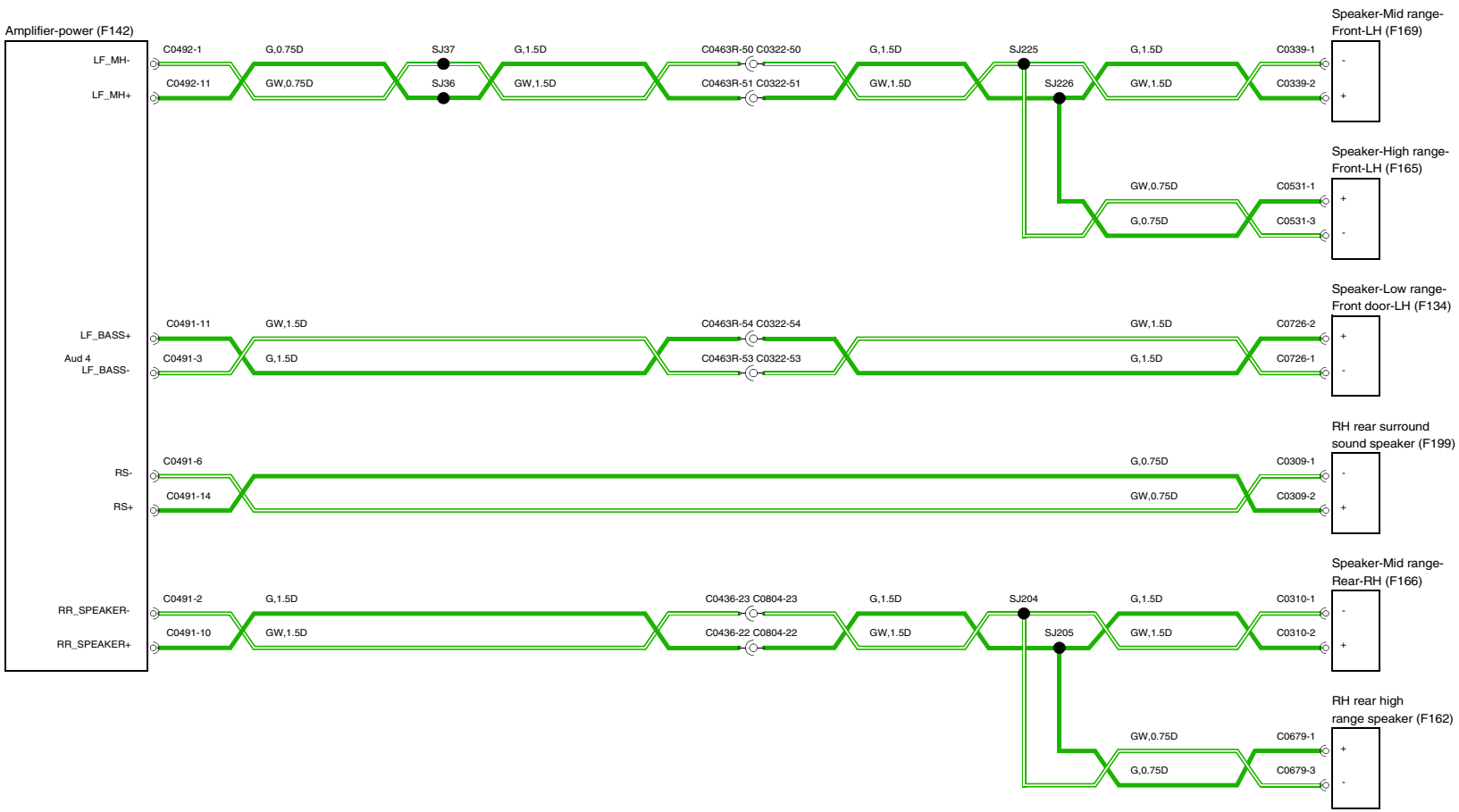
Amplifier-power (F142)
LF_MH-
LF_MH+
C0492-1
G,0.75D
SJ37
G,1.5D
C0463R-50 C0322-50
G,1.5D
SJ225
G,1.5D
C0339-1
C0492-11
GW,0.75D
SJ36
GW,1.5D
C0463R-51 C0322-51
GW,1.5D
SJ226
GW,1.5D
C0339-2
Speaker-Mid range-
Front-LH (F169)
GW,0.75D
C0531-1
G,0.75D
C0531-3
Speaker-High range-
Front-LH (F165)
LF_BASS+
Aud 4
LF_BASS-
C0491-11
GW,1.5D
C0463R-54 C0322-54
GW,1.5D
C0726-2
C0491-3
G,1.5D
C0463R-53 C0322-53
G,1.5D
C0726-1
Speaker-Low range-
Front door-LH (F134)
RS-
RS+
C0491-6
G,0.75D
C0309-1
C0491-14
GW,0.75D
C0309-2
RH rear surround
sound speaker (F199)
RR_SPEAKER-
RR_SPEAKER+
C0491-2
G,1.5D
C0436-23 C0804-23
G,1.5D
SJ204
G,1.5D
C0310-1
C0491-10
GW,1.5D
C0436-22 C0804-22
GW,1.5D
SJ205
GW,1.5D
C0310-2
Speaker-Mid range-
Rear-RH (F166)
GW,0.75D
C0679-1
G,0.75D
C0679-3
RH rear high
range speaker (F162)

Amplifier-power (F142)
Aud 2c
LF_DOOR+
LF_DOOR-
RF_DOOR+
RF_DOOR-
RR_DOOR+
RR_DOOR-
RL_DOOR+
R_DOOR-
C0491-13
C0491-5
C0491-14
C0491-6
C0491-10
C0491-2
C0491-9
C0491-1
GW,1.5D
G,1.5D
C0463R-51 C0322-51
C0463R-50 C0322-50
C0459R-53 C0336-53
C0459R-54 C0336-54
C0436-22 C0804-22
C0436-23 C0804-23
C0435-22 C0803-22
C0435-23 C0803-23
SJ226
SJ225
SJ217
SJ218
SJ205
SJ204
G,0.75D
GW,0.75D
C0726-2
C0726-1
C0531-3
C0531-1
C0688-2
C0688-1
C0530-3
C0530-1
C0310-2
C0310-1
C0679-3
C0679-1
Speaker-Mid range-Front-LH (F169)
Speaker-High range-Front-LH (F165)
Speaker-Mid range-Front-RH (F168)
Speaker-High range-Front-RH (F164)
Speaker-Mid range-Rear-RH (F166)
RH rear high range speaker (F162)
Speaker-Mid range-Rear-LH (F167)
LH rear high range speaker (F163)

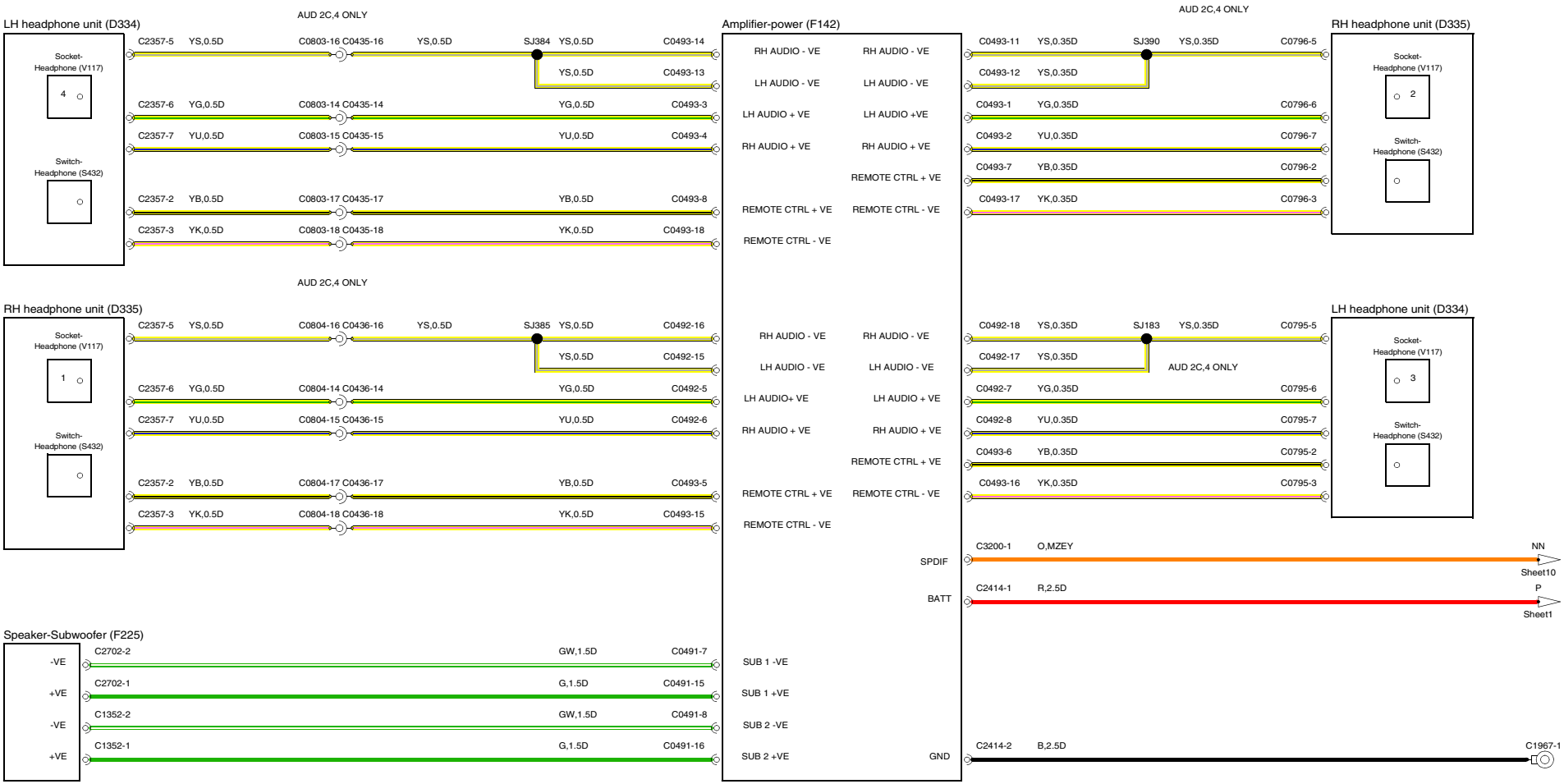
LH headphone unit (D334)
Socket-Headphone (V117)
4
Switch-Headphone (S432)
AUD 2C,4 ONLY
C2357-5 YS,0.5D C0803-16 C0435-16 YS,0.5D SJ384 YS,0.5D C0493-14
YS,0.5D C0493-13
C2357-6 YG,0.5D C0803-14 C0435-14 YG,0.5D C0493-3
C2357-7 YU,0.5D C0803-15 C0435-15 YU,0.5D C0493-4
C2357-2 YB,0.5D C0803-17 C0435-17 YB,0.5D C0493-8
C2357-3 YK,0.5D C0803-18 C0435-18 YK,0.5D C0493-18
Amplifier-power (F142)
RH AUDIO - VE
LH AUDIO - VE
LH AUDIO + VE
RH AUDIO + VE
REMOTE CTRL + VE
REMOTE CTRL - VE
RH AUDIO - VE
LH AUDIO - VE
LH AUDIO +VE
RH AUDIO + VE
REMOTE CTRL + VE
REMOTE CTRL - VE
AUD 2C,4 ONLY
C0493-11 YS,0.35D SJ390 YS,0.35D C0796-5
C0493-12 YS,0.35D
C0493-1 YG,0.35D C0796-6
C0493-2 YU,0.35D C0796-7
C0493-7 YB,0.35D C0796-2
C0493-17 YK,0.35D C0796-3
RH headphone unit (D335)
Socket-Headphone (V117)
2
Switch-Headphone (S432)
RH headphone unit (D335)
Socket-Headphone (V117)
1
Switch-Headphone (S432)
AUD 2C,4 ONLY
C2357-5 YS,0.5D C0804-16 C0436-16 YS,0.5D SJ385 YS,0.5D C0492-16
YS,0.5D C0492-15
C2357-6 YG,0.5D C0804-14 C0436-14 YG,0.5D C0492-5
C2357-7 YU,0.5D C0804-15 C0436-15 YU,0.5D C0492-6
C2357-2 YB,0.5D C0804-17 C0436-17 YB,0.5D C0493-5
C2357-3 YK,0.5D C0804-18 C0436-18 YK,0.5D C0493-15
RH AUDIO - VE
LH AUDIO - VE
LH AUDIO+ VE
RH AUDIO + VE
REMOTE CTRL + VE
REMOTE CTRL - VE
RH AUDIO - VE
LH AUDIO - VE
LH AUDIO + VE
RH AUDIO + VE
REMOTE CTRL + VE
REMOTE CTRL - VE
LH headphone unit (D334)
C0492-18 YS,0.35D SJ183 YS,0.35D C0795-5
C0492-17 YS,0.35D
AUD 2C,4 ONLY
C0492-7 YG,0.35D C0795-6
C0492-8 YU,0.35D C0795-7
C0493-6 YB,0.35D C0795-2
C0493-16 YK,0.35D C0795-3
LH headphone unit (D334)
Socket-Headphone (V117)
3
Switch-Headphone (S432)
SPDIF
C3200-1 O,MZEY NN
Sheet10
BATT
C2414-1 R,2.5D P
Sheet1
Speaker-Subwoofer (F225)
-VE
+VE
-VE
+VE
C2702-2 GW,1.5D C0491-7
C2702-1 G,1.5D C0491-15
C1352-2 GW,1.5D C0491-8
C1352-1 G,1.5D C0491-16
SUB 1 -VE
SUB 1 +VE
SUB 2 -VE
SUB 2 +VE
GND
C2414-2 B,2.5D C1967-1

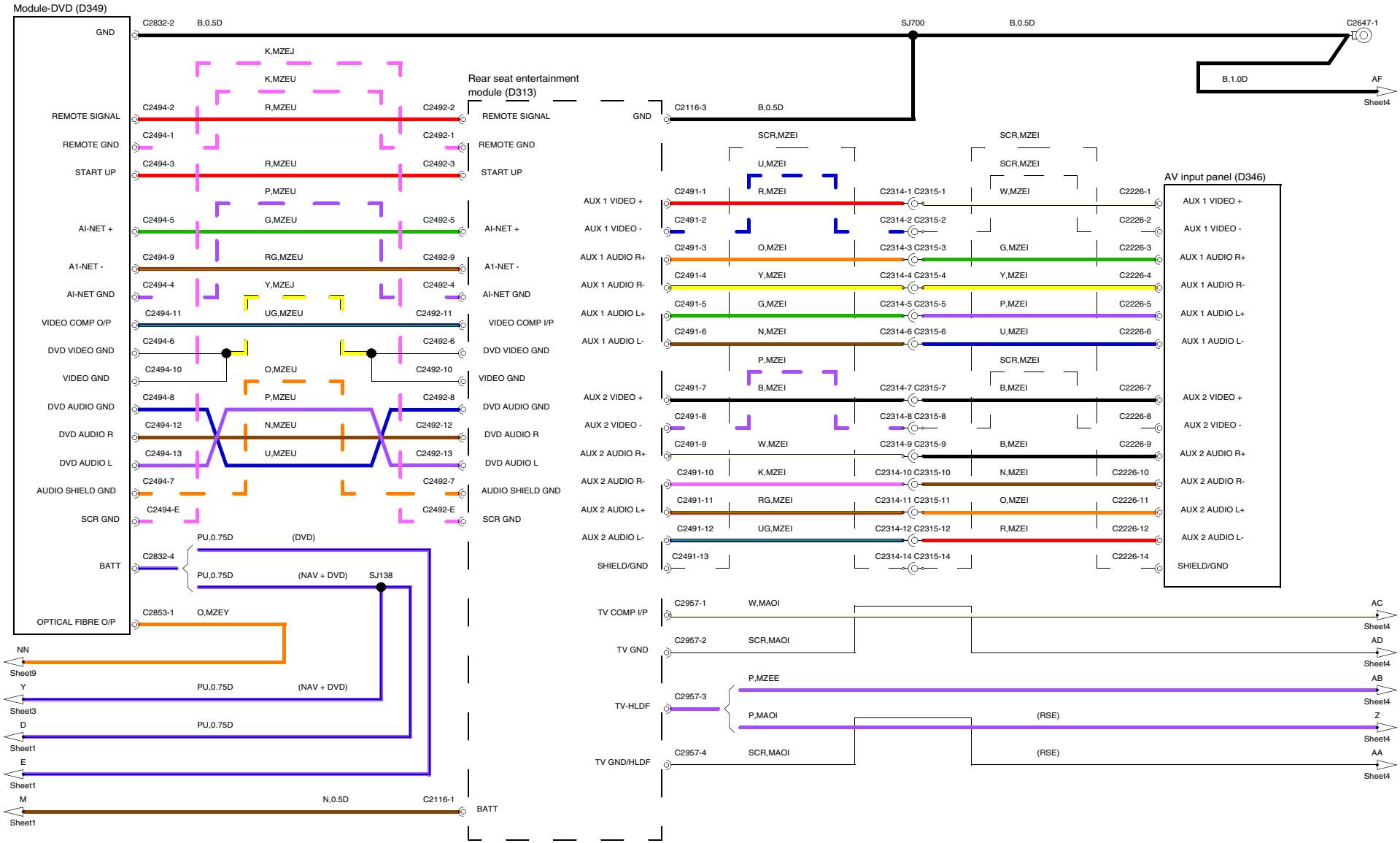
Module-DVD (D349)
GND
REMOTE SIGNAL
REMOTE GND
START UP
AI-NET +
A1-NET -
AI-NET GND
VIDEO COMP O/P
DVD VIDEO GND
VIDEO GND
DVD AUDIO GND
DVD AUDIO R
DVD AUDIO L
AUDIO SHIELD GND
SCR GND
BATT
OPTICAL FIBRE O/P
C2832-2
B,0.5D
SJ700
C2647-1
B,1.0D
AF
Sheet4
Rear seat entertainment module (D313)
C2494-2
C2492-2
C2494-1
C2492-1
C2494-3
C2492-3
C2494-5
C2492-5
C2494-9
C2492-9
C2494-4
C2492-4
C2494-11
C2492-11
C2494-6
C2492-6
C2494-10
C2492-10
C2494-8
C2492-8
C2494-12
C2492-12
C2494-13
C2492-13
C2494-7
C2492-7
C2494-E
C2492-E
C2116-3
C2832-4
PU,0.75D
(DVD)
(NAV + DVD)
SJ138
C2853-1
O,MZEY
NN
Sheet9
Y
Sheet3
D
Sheet1
E
Sheet1
M
N,0.5D
C2116-1
AV input panel (D346)
AUX 1 VIDEO +
AUX 1 VIDEO -
AUX 1 AUDIO R+
AUX 1 AUDIO R-
AUX 1 AUDIO L+
AUX 1 AUDIO L-
AUX 2 VIDEO +
AUX 2 VIDEO -
AUX 2 AUDIO R+
AUX 2 AUDIO R-
AUX 2 AUDIO L+
AUX 2 AUDIO L-
SHIELD/GND
C2491-1
C2314-1 C2315-1
C2226-1
C2491-2
C2314-2 C2315-2
C2226-2
C2491-3
C2314-3 C2315-3
C2226-3
C2491-4
C2314-4 C2315-4
C2226-4
C2491-5
C2314-5 C2315-5
C2226-5
C2491-6
C2314-6 C2315-6
C2226-6
C2491-7
C2314-7 C2315-7
C2226-7
C2491-8
C2314-8 C2315-8
C2226-8
C2491-9
C2314-9 C2315-9
C2226-9
C2491-10
C2314-10 C2315-10
C2226-10
C2491-11
C2314-11 C2315-11
C2226-11
C2491-12
C2314-12 C2315-12
C2226-12
C2491-13
C2314-14 C2315-14
C2226-14
TV COMP I/P
TV GND
TV-HLDF
TV GND/HLDF
C2957-1
C2957-2
C2957-3
C2957-4
AC
AD
AB
Z
AA
(RSE)

RSE MEMORY/POWER SEATS

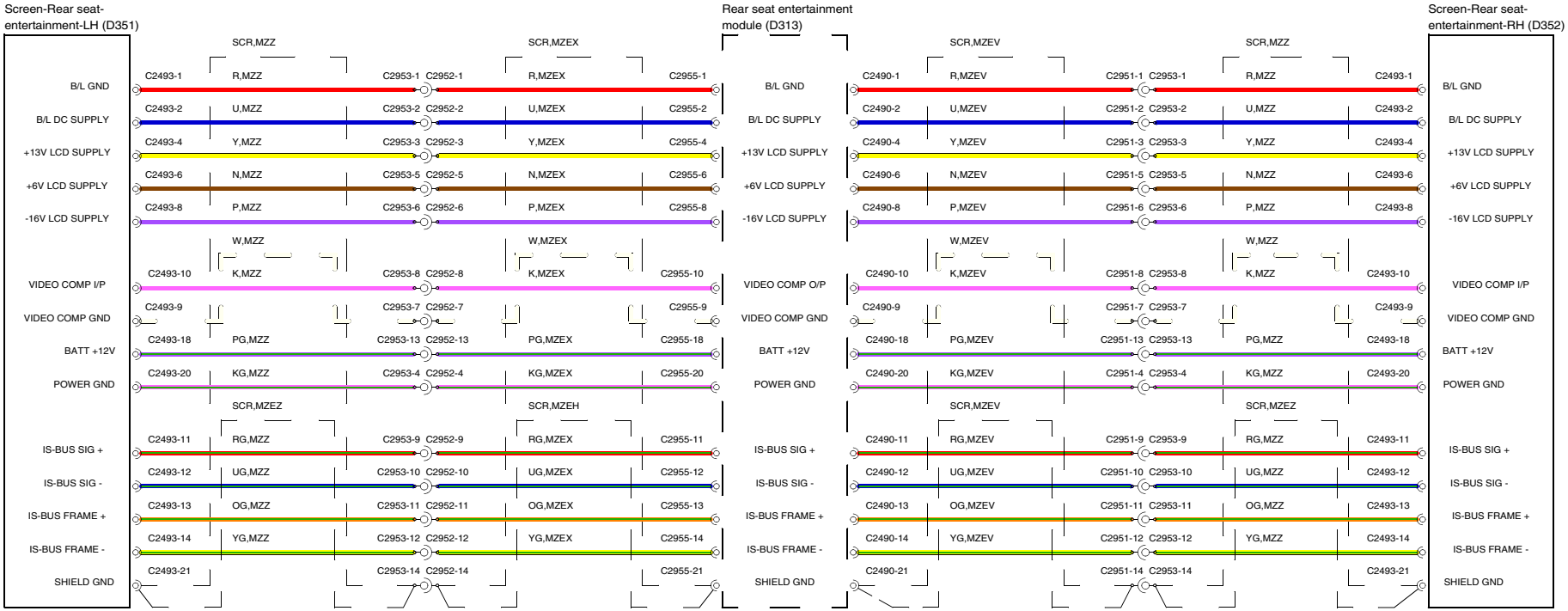

RSE MANUAL SEATS (NAV)

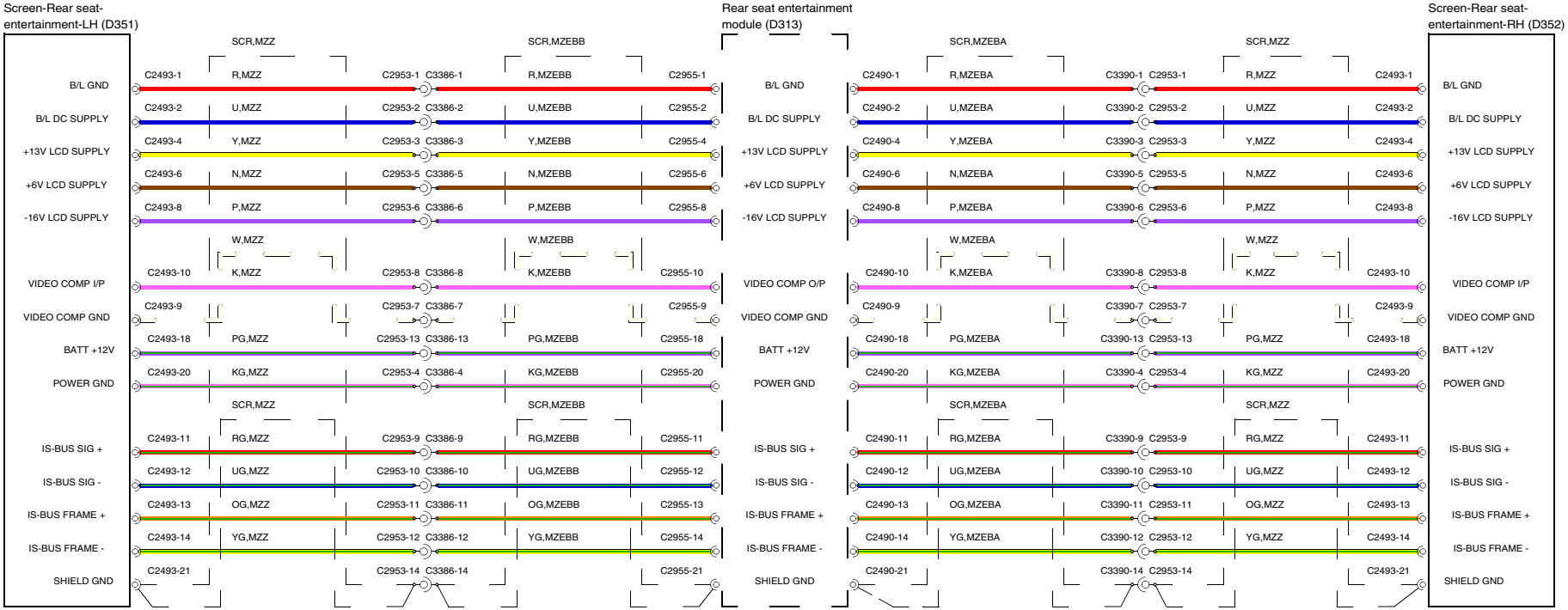

RSE MANUAL SEATS (NON-NAV)

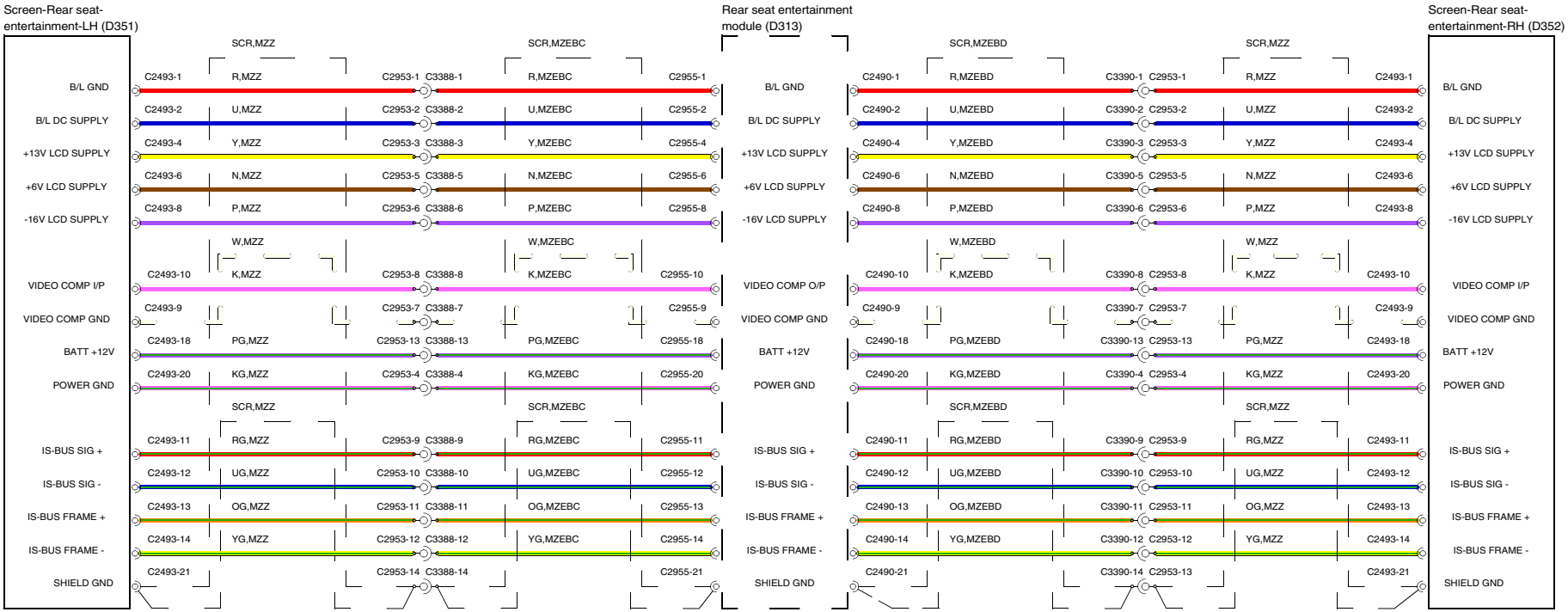

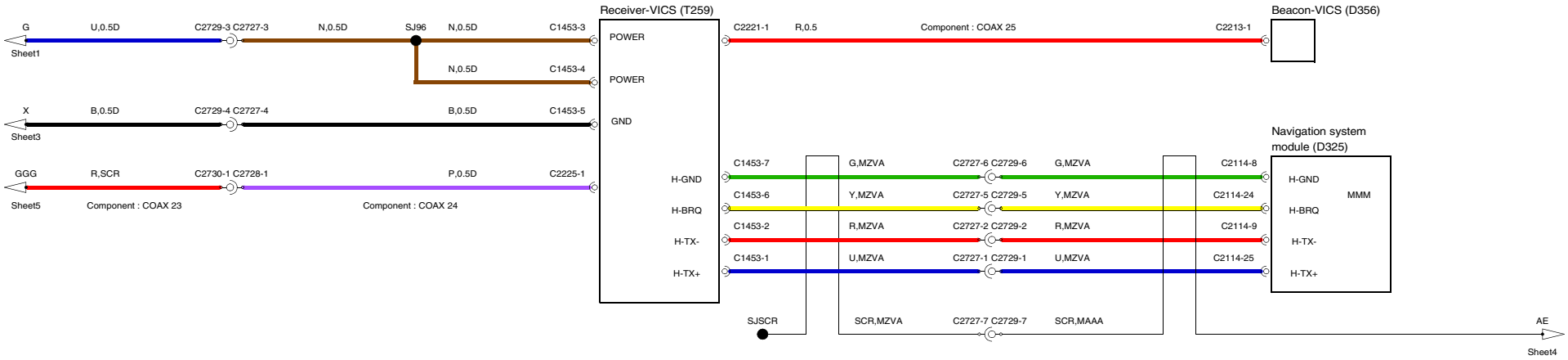
Receiver-VICS (T259)
Beacon-VICS (D356)
Navigation system module (D325)
G
U,0.5D
C2729-3 C2727-3
N,0.5D
SJ96
N,0.5D
C1453-3
Sheet1
N,0.5D
C1453-4
POWER
POWER
GND
X
B,0.5D
C2729-4 C2727-4
B,0.5D
C1453-5
Sheet3
GGG
R,SCR
C2730-1 C2728-1
P,0.5D
C2225-1
Sheet5
Component : COAX 23
Component : COAX 24
H-GND
H-BRQ
H-TX-
H-TX+
C2221-1
R,0.5
Component : COAX 25
C2213-1
C1453-7
G,MZVA
C2727-6 C2729-6
G,MZVA
C2114-8
C1453-6
Y,MZVA
C2727-5 C2729-5
Y,MZVA
C2114-24
C1453-2
R,MZVA
C2727-2 C2729-2
R,MZVA
C2114-9
C1453-1
U,MZVA
C2727-1 C2729-1
U,MZVA
C2114-25
MMM
SJSCR
SCR,MZVA
C2727-7 C2729-7
SCR,MAAA
AE
Sheet4