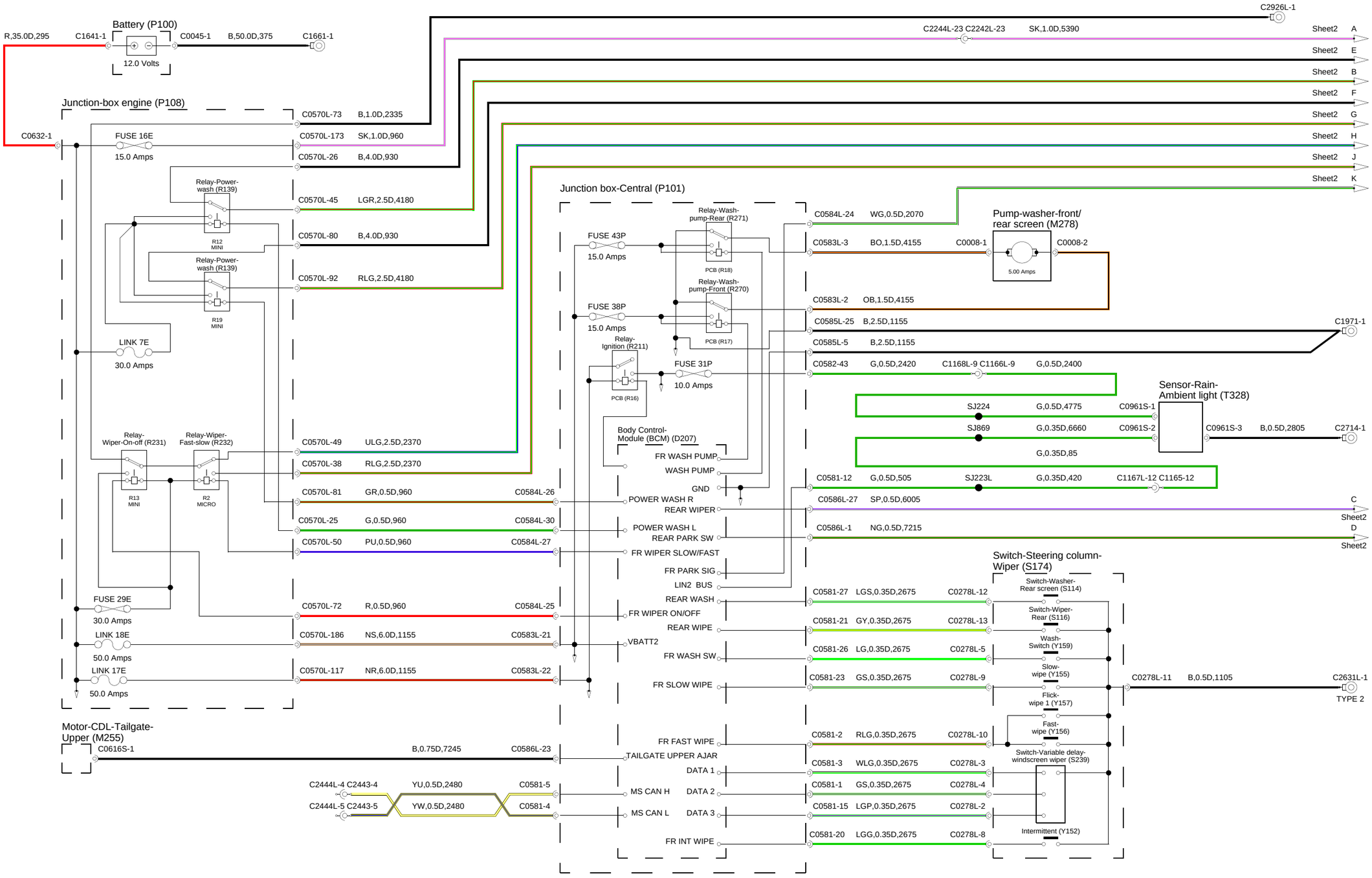
Battery (P100)
12.0 Volts
R,35.0D,295
C1641-1
C0045-1
B,50.0D,375
C1661-1
C2926L-1
C2244L-23 C2242L-23
SK,1.0D,5390
Sheet2 A
Sheet2 E
Sheet2 B
Sheet2 F
Sheet2 G
Sheet2 H
Sheet2 J
Sheet2 K
Junction-box engine (P108)
C0632-1
FUSE 16E
15.0 Amps
C0570L-73 B,1.0D,2335
C0570L-173 SK,1.0D,960
C0570L-26 B,4.0D,930
Relay-Power-wash (R139)
R12 MINI
C0570L-45 LGR,2.5D,4180
C0570L-80 B,4.0D,930
Relay-Power-wash (R139)
R19 MINI
C0570L-92 RLG,2.5D,4180
LINK 7E
30.0 Amps
Relay-Wiper-On-off (R231)
Relay-Wiper-Fast-slow (R232)
R13 MINI
R2 MICRO
C0570L-49 ULG,2.5D,2370
C0570L-38 RLG,2.5D,2370
C0570L-81 GR,0.5D,960 C0584L-26
C0570L-25 G,0.5D,960 C0584L-30
C0570L-50 PU,0.5D,960 C0584L-27
FUSE 29E
30.0 Amps
C0570L-72 R,0.5D,960 C0584L-25
LINK 18E
50.0 Amps
C0570L-186 NS,6.0D,1155 C0583L-21
LINK 17E
50.0 Amps
C0570L-117 NR,6.0D,1155 C0583L-22
Junction box-Central (P101)
FUSE 43P
15.0 Amps
Relay-Wash-pump-Rear (R271)
PCB (R18)
FUSE 38P
15.0 Amps
Relay-Wash-pump-Front (R270)
PCB (R17)
Relay-Ignition (R211)
PCB (R16)
FUSE 31P
10.0 Amps
Body Control-Module (BCM) (D207)
FR WASH PUMP
WASH PUMP
GND
POWER WASH R
REAR WIPER
POWER WASH L
REAR PARK SW
FR WIPER SLOW/FAST
FR PARK SIG
LIN2 BUS
REAR WASH
FR WIPER ON/OFF
REAR WIPE
VBATT2
FR WASH SW
FR SLOW WIPE
FR FAST WIPE
TAILGATE UPPER AJAR
DATA 1
MS CAN H
DATA 2
MS CAN L
DATA 3
FR INT WIPE
C0584L-24 WG,0.5D,2070
C0583L-3 BO,1.5D,4155
C0008-1
C0008-2
Pump-washer-front/rear screen (M278)
5.00 Amps
C0583L-2 OB,1.5D,4155
C0585L-25 B,2.5D,1155
C1971-1
C0585L-5 B,2.5D,1155
C0582-43 G,0.5D,2420 C1168L-9 C1166L-9 G,0.5D,2400
Sensor-Rain-Ambient light (T328)
SJ224 G,0.5D,4775 C0961S-1
SJ869 G,0.35D,6660 C0961S-2
C0961S-3 B,0.5D,2805 C2714-1
G,0.35D,85
C0581-12 G,0.5D,505 SJ223L G,0.35D,420 C1167L-12 C1165-12
C0586L-27 SP,0.5D,6005
C
Sheet2
C0586L-1 NG,0.5D,7215
D
Sheet2
Switch-Steering column-Wiper (S174)
Switch-Washer-Rear screen (S114)
C0581-27 LGS,0.35D,2675 C0278L-12
Switch-Wiper-Rear (S116)
C0581-21 GY,0.35D,2675 C0278L-13
Wash-Switch (Y159)
C0581-26 LG,0.35D,2675 C0278L-5
Slow-wipe (Y155)
C0581-23 GS,0.35D,2675 C0278L-9
C0278L-11 B,0.5D,1105 C2631L-1
TYPE 2
Flick-wipe 1 (Y157)
Fast-wipe (Y156)
C0581-2 RLG,0.35D,2675 C0278L-10
Switch-Variable delay-windscreen wiper (S239)
C0581-3 WLG,0.35D,2675 C0278L-3
C0581-1 GS,0.35D,2675 C0278L-4
C0581-15 LGP,0.35D,2675 C0278L-2
Intermittent (Y152)
C0581-20 LGG,0.35D,2675 C0278L-8
Motor-CDL-Tailgate-Upper (M255)
C0616S-1
B,0.75D,7245 C0586L-23
C2444L-4 C2443-4
YU,0.5D,2480 C0581-5
C2444L-5 C2443-5
YW,0.5D,2480 C0581-4

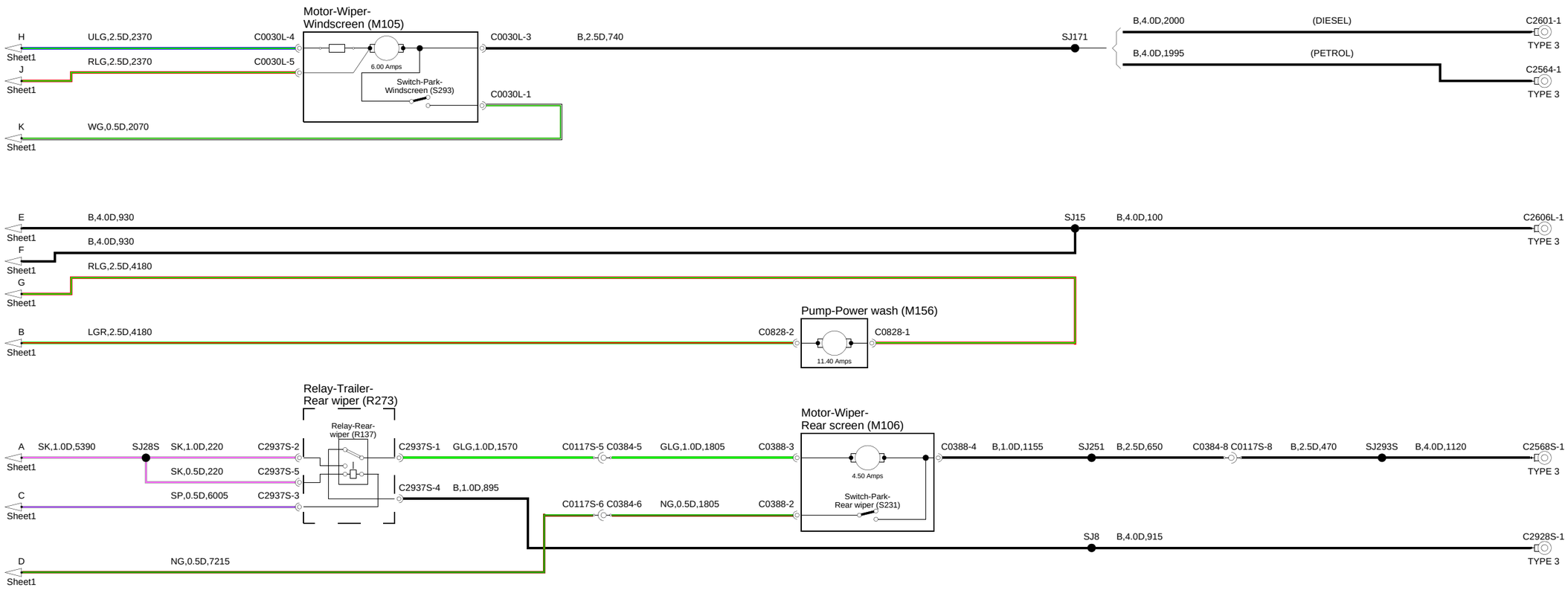
Motor-Wiper-
Windscreen (M105)
H
Sheet1
ULG,2.5D,2370
C0030L-4
J
Sheet1
RLG,2.5D,2370
C0030L-5
6.00 Amps
Switch-Park-
Windscreen (S293)
C0030L-3
B,2.5D,740
C0030L-1
K
Sheet1
WG,0.5D,2070
SJ171
B,4.0D,2000
(DIESEL)
C2601-1
TYPE 3
B,4.0D,1995
(PETROL)
C2564-1
TYPE 3
E
Sheet1
B,4.0D,930
F
Sheet1
B,4.0D,930
G
Sheet1
RLG,2.5D,4180
SJ15
B,4.0D,100
C2606L-1
TYPE 3
Pump-Power wash (M156)
B
Sheet1
LGR,2.5D,4180
C0828-2
C0828-1
11.40 Amps
Relay-Trailer-
Rear wiper (R273)
Relay-Rear-
wiper (R137)
A
Sheet1
SK,1.0D,5390
SJ28S
SK,1.0D,220
C2937S-2
SK,0.5D,220
C2937S-5
C
Sheet1
SP,0.5D,6005
C2937S-3
C2937S-1
GLG,1.0D,1570
C0117S-5
C0384-5
GLG,1.0D,1805
C0388-3
C2937S-4
B,1.0D,895
C0117S-6
C0384-6
NG,0.5D,1805
C0388-2
Motor-Wiper-
Rear screen (M106)
4.50 Amps
Switch-Park-
Rear wiper (S231)
C0388-4
B,1.0D,1155
SJ251
B,2.5D,650
C0384-8
C0117S-8
B,2.5D,470
SJ293S
B,4.0D,1120
C2568S-1
TYPE 3
SJ8
B,4.0D,915
C2928S-1
TYPE 3
D
Sheet1
NG,0.5D,7215