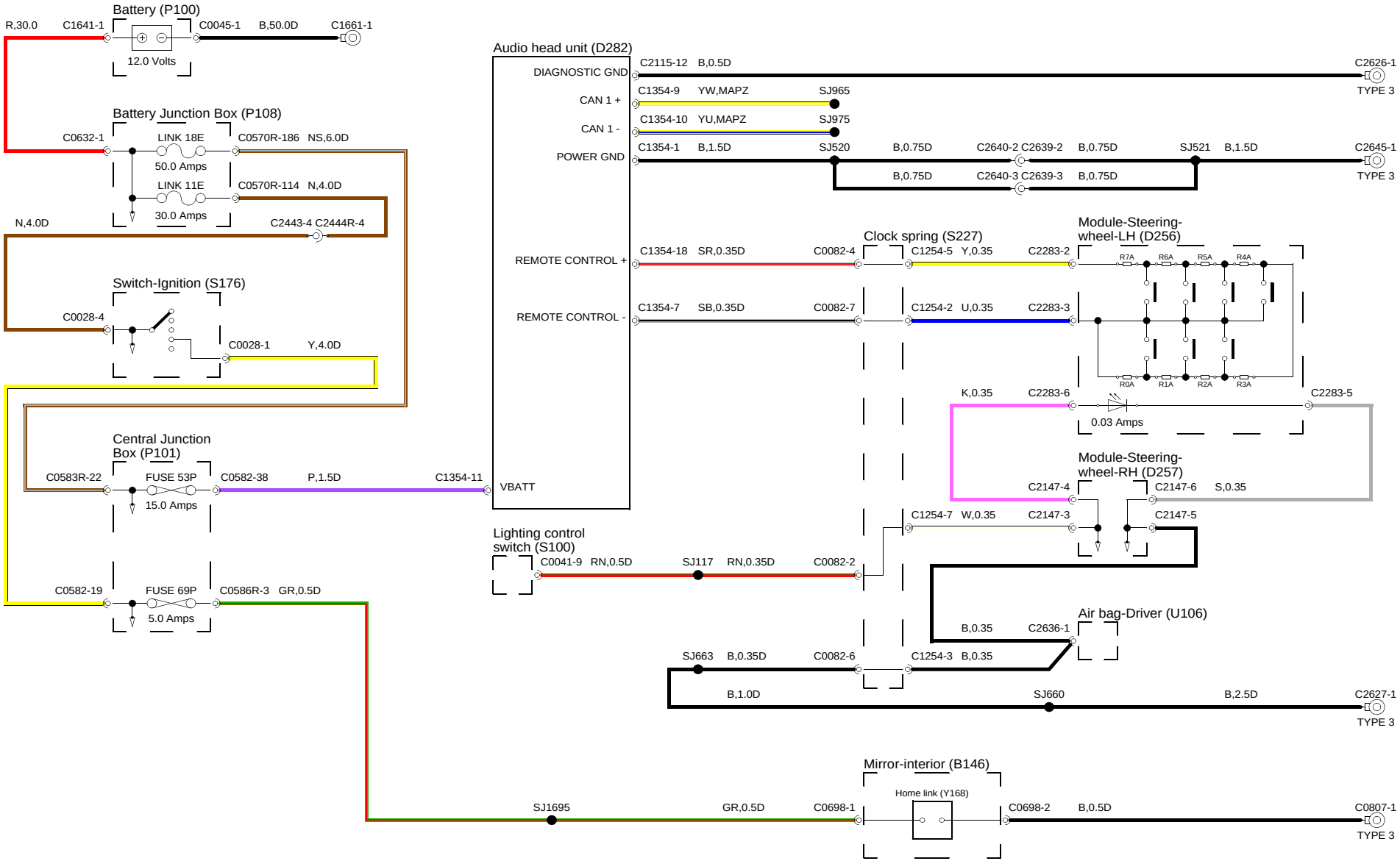
Battery (P100)
R,30.0
C1641-1
C0045-1
B,50.0D
C1661-1
12.0 Volts
Battery Junction Box (P108)
C0632-1
LINK 18E
C0570R-186
NS,6.0D
50.0 Amps
LINK 11E
C0570R-114
N,4.0D
30.0 Amps
N,4.0D
C2443-4 C2444R-4
Switch-Ignition (S176)
C0028-4
C0028-1
Y,4.0D
Central Junction Box (P101)
C0583R-22
FUSE 53P
C0582-38
P,1.5D
C1354-11
15.0 Amps
C0582-19
FUSE 69P
C0586R-3
GR,0.5D
5.0 Amps
Audio head unit (D282)
DIAGNOSTIC GND
C2115-12
B,0.5D
C2626-1
TYPE 3
CAN 1 +
C1354-9
YW,MAPZ
SJ965
CAN 1 -
C1354-10
YU,MAPZ
SJ975
POWER GND
C1354-1
B,1.5D
SJ520
B,0.75D
C2640-2 C2639-2
B,0.75D
SJ521
B,1.5D
C2645-1
TYPE 3
B,0.75D
C2640-3 C2639-3
B,0.75D
REMOTE CONTROL +
C1354-18
SR,0.35D
C0082-4
Clock spring (S227)
C1254-5
Y,0.35
C2283-2
Module-Steering-wheel-LH (D256)
R7A
R6A
R5A
R4A
REMOTE CONTROL -
C1354-7
SB,0.35D
C0082-7
C1254-2
U,0.35
C2283-3
R0A
R1A
R2A
R3A
K,0.35
C2283-6
C2283-5
0.03 Amps
Module-Steering-wheel-RH (D257)
C2147-4
C2147-6
S,0.35
C1254-7
W,0.35
C2147-3
C2147-5
VBATT
Lighting control switch (S100)
C0041-9
RN,0.5D
SJ117
RN,0.35D
C0082-2
Air bag-Driver (U106)
B,0.35
C2636-1
SJ663
B,0.35D
C0082-6
C1254-3
B,0.35
B,1.0D
SJ660
B,2.5D
C2627-1
TYPE 3
Mirror-interior (B146)
Home link (Y168)
SJ1695
GR,0.5D
C0698-1
C0698-2
B,0.5D
C0807-1
TYPE 3

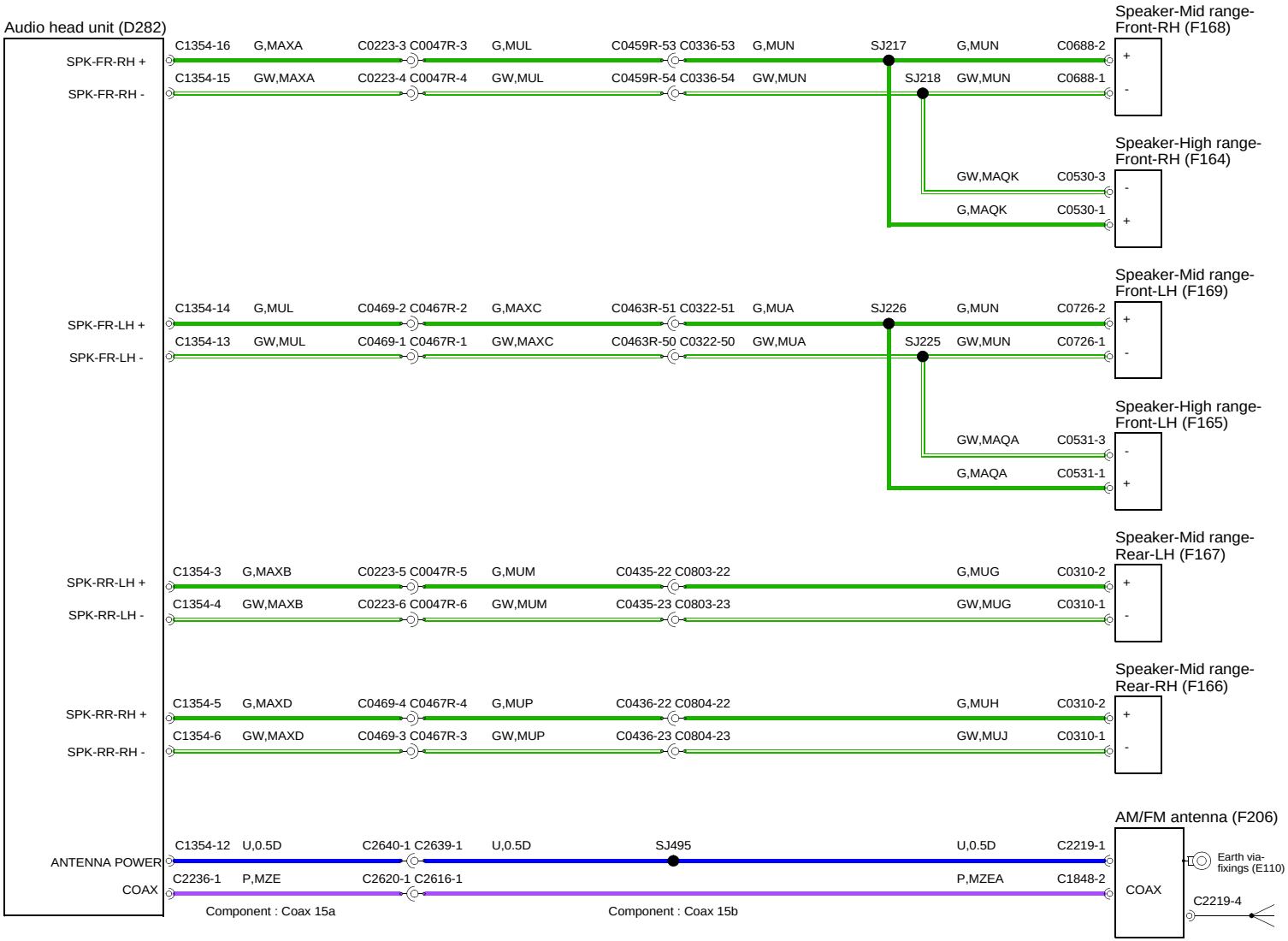
Audio head unit (D282)
SPK-FR-RH +
SPK-FR-RH -
C1354-16 G,MAXA C0223-3 C0047R-3 G,MUL C0459R-53 C0336-53 G,MUN SJ217 G,MUN C0688-2
C1354-15 GW,MAXA C0223-4 C0047R-4 GW,MUL C0459R-54 C0336-54 GW,MUN SJ218 GW,MUN C0688-1
Speaker-Mid range-Front-RH (F168)
Speaker-High range-Front-RH (F164)
GW,MAQK C0530-3
G,MAQK C0530-1
SPK-FR-LH +
SPK-FR-LH -
C1354-14 G,MUL C0469-2 C0467R-2 G,MAXC C0463R-51 C0322-51 G,MUA SJ226 G,MUN C0726-2
C1354-13 GW,MUL C0469-1 C0467R-1 GW,MAXC C0463R-50 C0322-50 GW,MUA SJ225 GW,MUN C0726-1
Speaker-Mid range-Front-LH (F169)
Speaker-High range-Front-LH (F165)
GW,MAQA C0531-3
G,MAQA C0531-1
SPK-RR-LH +
SPK-RR-LH -
C1354-3 G,MAXB C0223-5 C0047R-5 G,MUM C0435-22 C0803-22 G,MUG C0310-2
C1354-4 GW,MAXB C0223-6 C0047R-6 GW,MUM C0435-23 C0803-23 GW,MUG C0310-1
Speaker-Mid range-Rear-LH (F167)
SPK-RR-RH +
SPK-RR-RH -
C1354-5 G,MAXD C0469-4 C0467R-4 G,MUP C0436-22 C0804-22 G,MUH C0310-2
C1354-6 GW,MAXD C0469-3 C0467R-3 GW,MUP C0436-23 C0804-23 GW,MUJ C0310-1
Speaker-Mid range-Rear-RH (F166)
ANTENNA POWER
COAX
C1354-12 U,0.5D C2640-1 C2639-1 U,0.5D SJ495 U,0.5D C2219-1
C2236-1 P,MZE C2620-1 C2616-1 P,MZEA C1848-2
Component : Coax 15a
Component : Coax 15b
AM/FM antenna (F206)
COAX
Earth via-fixings (E110)
C2219-4

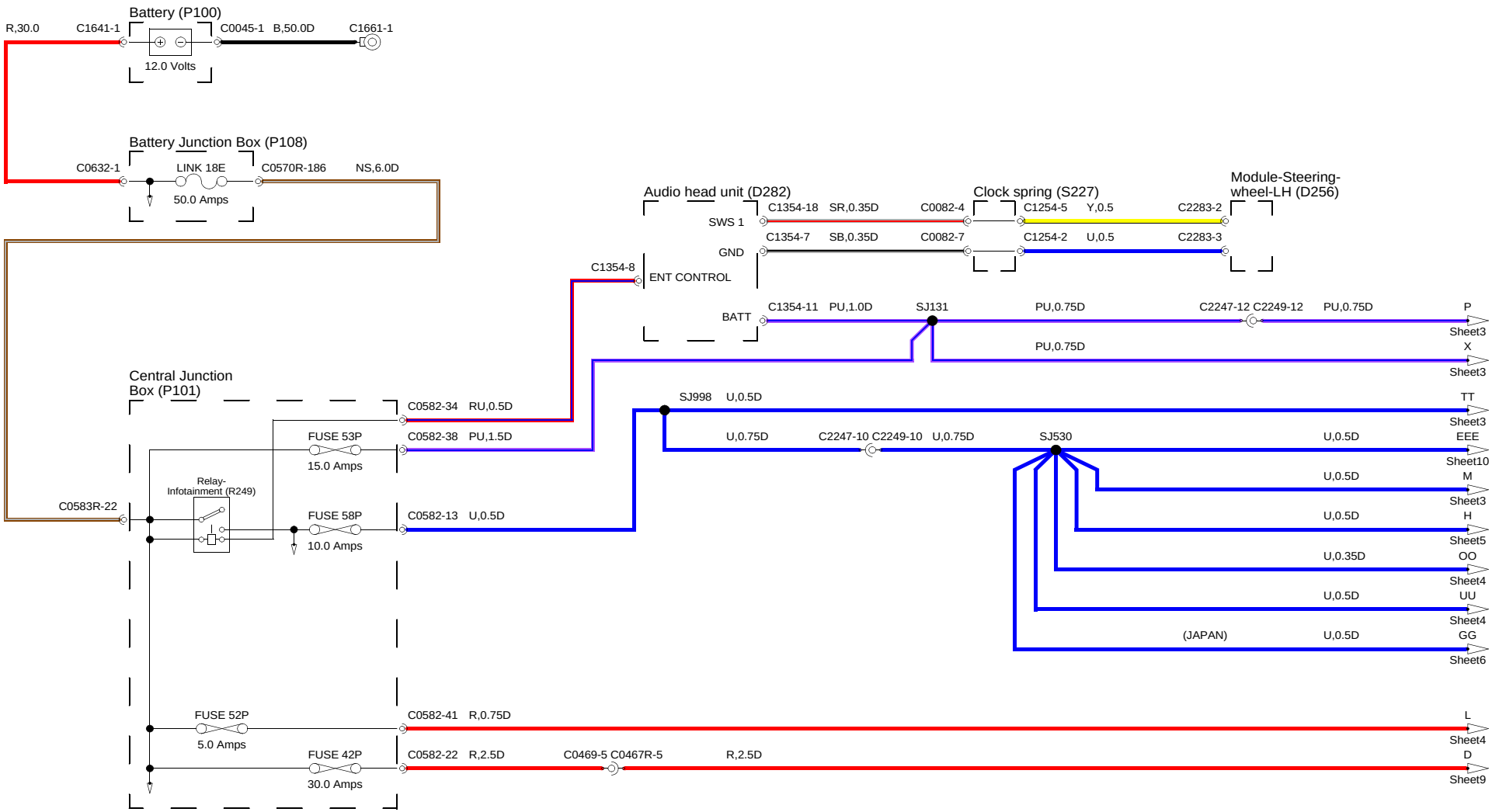
Battery (P100)
R,30.0
C1641-1
C0045-1
B,50.0D
C1661-1
12.0 Volts
Battery Junction Box (P108)
C0632-1
LINK 18E
C0570R-186
NS,6.0D
50.0 Amps
Audio head unit (D282)
Clock spring (S227)
Module-Steering-wheel-LH (D256)
SWS 1
C1354-18
SR,0.35D
C0082-4
C1254-5
Y,0.5
C2283-2
GND
C1354-7
SB,0.35D
C0082-7
C1254-2
U,0.5
C2283-3
C1354-8
ENT CONTROL
BATT
C1354-11
PU,1.0D
SJ131
PU,0.75D
C2247-12
C2249-12
PU,0.75D
P
Sheet3
PU,0.75D
X
Sheet3
Central Junction Box (P101)
C0582-34
RU,0.5D
SJ998
U,0.5D
TT
Sheet3
FUSE 53P
C0582-38
PU,1.5D
15.0 Amps
U,0.75D
C2247-10
C2249-10
U,0.75D
SJ530
U,0.5D
EEE
Sheet10
Relay-Infotainment (R249)
C0583R-22
FUSE 58P
C0582-13
U,0.5D
10.0 Amps
U,0.5D
M
Sheet3
U,0.5D
H
Sheet5
U,0.35D
OO
Sheet4
U,0.5D
UU
Sheet4
(JAPAN)
U,0.5D
GG
Sheet6
FUSE 52P
C0582-41
R,0.75D
5.0 Amps
L
Sheet4
FUSE 42P
C0582-22
R,2.5D
C0469-5
C0467R-5
R,2.5D
30.0 Amps
D
Sheet9

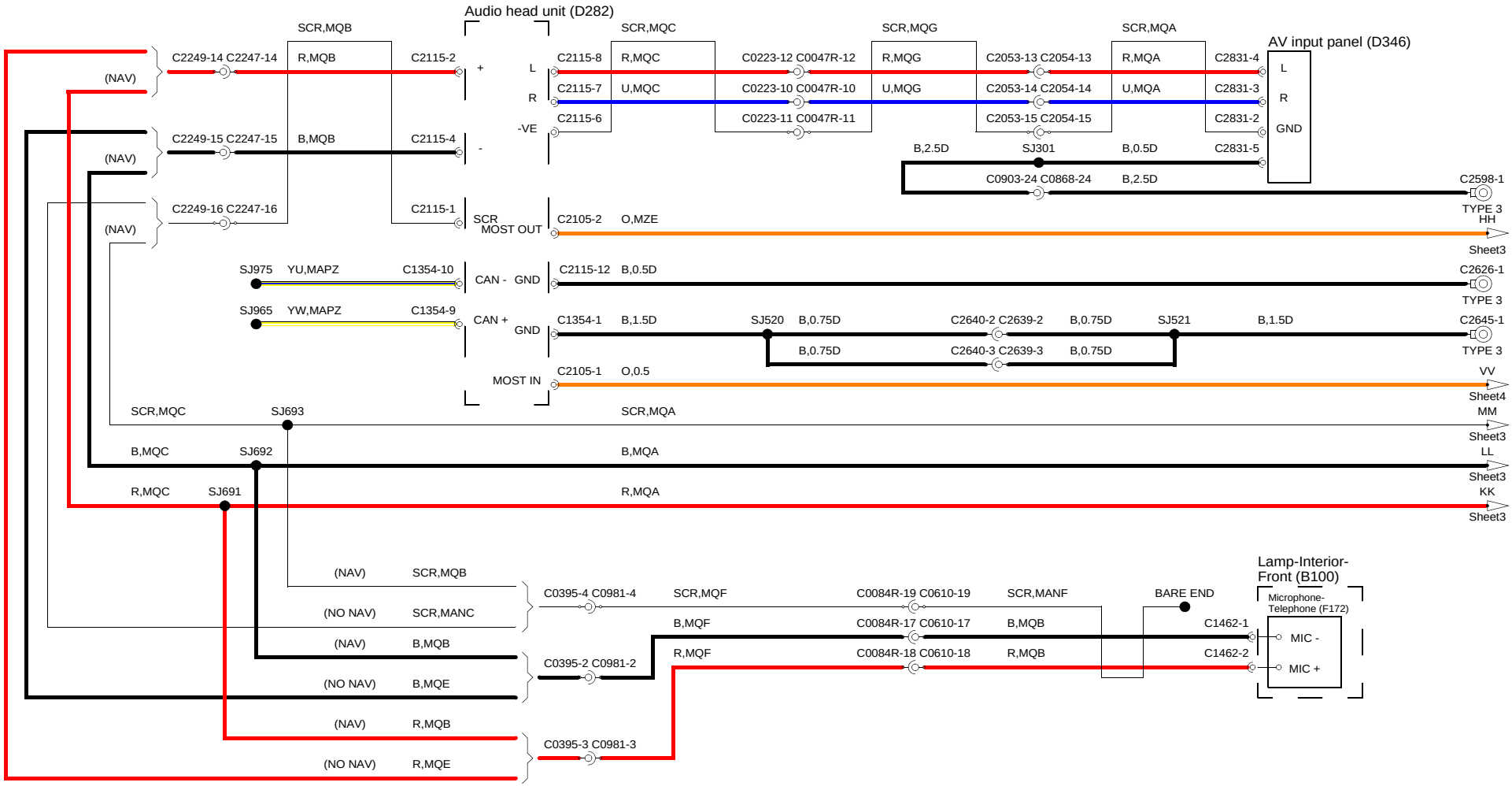
Audio head unit (D282)
AV input panel (D346)
SCR,MQB
SCR,MQC
SCR,MQG
SCR,MQA
C2249-14 C2247-14
R,MQB
C2115-2
+
L
C2115-8
R,MQC
C0223-12 C0047R-12
R,MQG
C2053-13 C2054-13
R,MQA
C2831-4
(NAV)
R
C2115-7
U,MQC
C0223-10 C0047R-10
U,MQG
C2053-14 C2054-14
U,MQA
C2831-3
-VE
C2115-6
C0223-11 C0047R-11
C2053-15 C2054-15
C2831-2
GND
C2249-15 C2247-15
B,MQB
C2115-4
-
B,2.5D
SJ301
B,0.5D
C2831-5
C0903-24 C0868-24
B,2.5D
C2598-1
TYPE 3
C2249-16 C2247-16
C2115-1
SCR
MOST OUT
C2105-2
O,MZE
HH
Sheet3
SJ975
YU,MAPZ
C1354-10
CAN -
GND
C2115-12
B,0.5D
C2626-1
TYPE 3
SJ965
YW,MAPZ
C1354-9
CAN +
GND
C1354-1
B,1.5D
SJ520
B,0.75D
C2640-2 C2639-2
B,0.75D
SJ521
B,1.5D
C2645-1
TYPE 3
C2640-3 C2639-3
MOST IN
C2105-1
O,0.5
VV
Sheet4
SJ693
MM
Sheet3
B,MQC
SJ692
B,MQA
LL
Sheet3
R,MQC
SJ691
R,MQA
KK
Sheet3
Lamp-Interior-Front (B100)
Microphone-Telephone (F172)
SCR,MQB
C0395-4 C0981-4
SCR,MQF
C0084R-19 C0610-19
SCR,MANF
BARE END
SCR,MANC
B,MQF
C0084R-17 C0610-17
B,MQB
C1462-1
MIC -
B,MQB
R,MQF
C0084R-18 C0610-18
R,MQB
C1462-2
MIC +
C0395-2 C0981-2
B,MQE
R,MQB
C0395-3 C0981-3
R,MQE

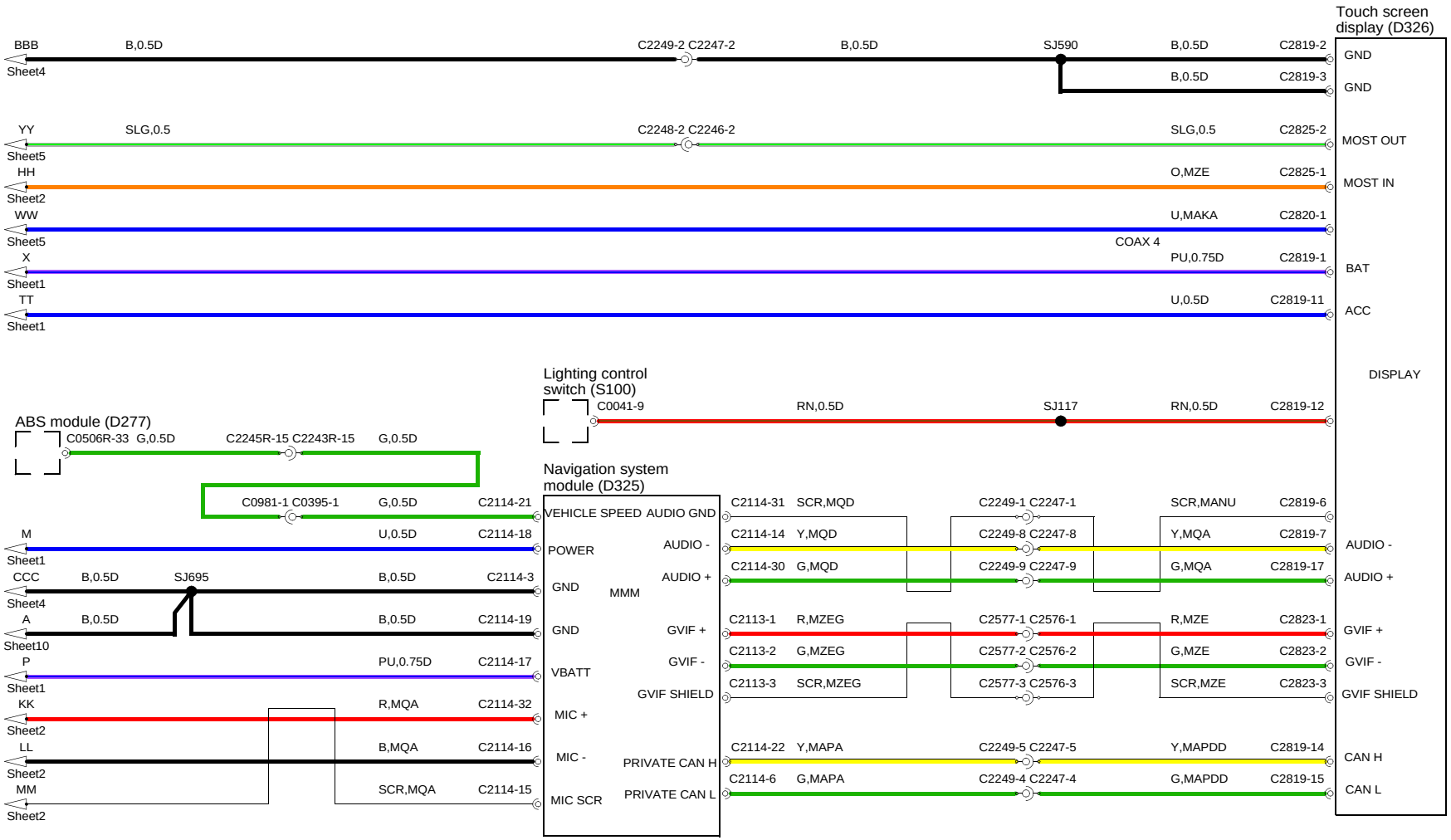
Touch screen display (D326)
BBB
Sheet4
B,0.5D
C2249-2 C2247-2
B,0.5D
SJ590
B,0.5D
C2819-2
GND
B,0.5D
C2819-3
GND
YY
Sheet5
SLG,0.5
C2248-2 C2246-2
SLG,0.5
C2825-2
MOST OUT
HH
Sheet2
O,MZE
C2825-1
MOST IN
WW
Sheet5
U,MAKA
C2820-1
COAX 4
X
Sheet1
PU,0.75D
C2819-1
BAT
TT
Sheet1
U,0.5D
C2819-11
ACC
DISPLAY
Lighting control switch (S100)
C0041-9
RN,0.5D
SJ117
RN,0.5D
C2819-12
ABS module (D277)
C0506R-33 G,0.5D
C2245R-15 C2243R-15
G,0.5D
Navigation system module (D325)
C0981-1 C0395-1
G,0.5D
C2114-21
VEHICLE SPEED
AUDIO GND
M
Sheet1
U,0.5D
C2114-18
POWER
AUDIO -
CCC
Sheet4
B,0.5D
SJ695
B,0.5D
C2114-3
GND
MMM
AUDIO +
A
Sheet10
B,0.5D
B,0.5D
C2114-19
GND
GVIF +
P
Sheet1
PU,0.75D
C2114-17
VBATT
GVIF -
GVIF SHIELD
KK
Sheet2
R,MQA
C2114-32
MIC +
LL
Sheet2
B,MQA
C2114-16
MIC -
MM
Sheet2
SCR,MQA
C2114-15
MIC SCR
C2114-31 SCR,MQD
C2249-1 C2247-1
SCR,MANU
C2819-6
C2114-14 Y,MQD
C2249-8 C2247-8
Y,MQA
C2819-7
AUDIO -
C2114-30 G,MQD
C2249-9 C2247-9
G,MQA
C2819-17
AUDIO +
C2113-1 R,MZEG
C2577-1 C2576-1
R,MZE
C2823-1
GVIF +
C2113-2 G,MZEG
C2577-2 C2576-2
G,MZE
C2823-2
GVIF -
C2113-3 SCR,MZEG
C2577-3 C2576-3
SCR,MZE
C2823-3
GVIF SHIELD
PRIVATE CAN H
C2114-22 Y,MAPA
C2249-5 C2247-5
Y,MAPDD
C2819-14
CAN H
PRIVATE CAN L
C2114-6 G,MAPA
C2249-4 C2247-4
G,MAPDD
C2819-15
CAN L

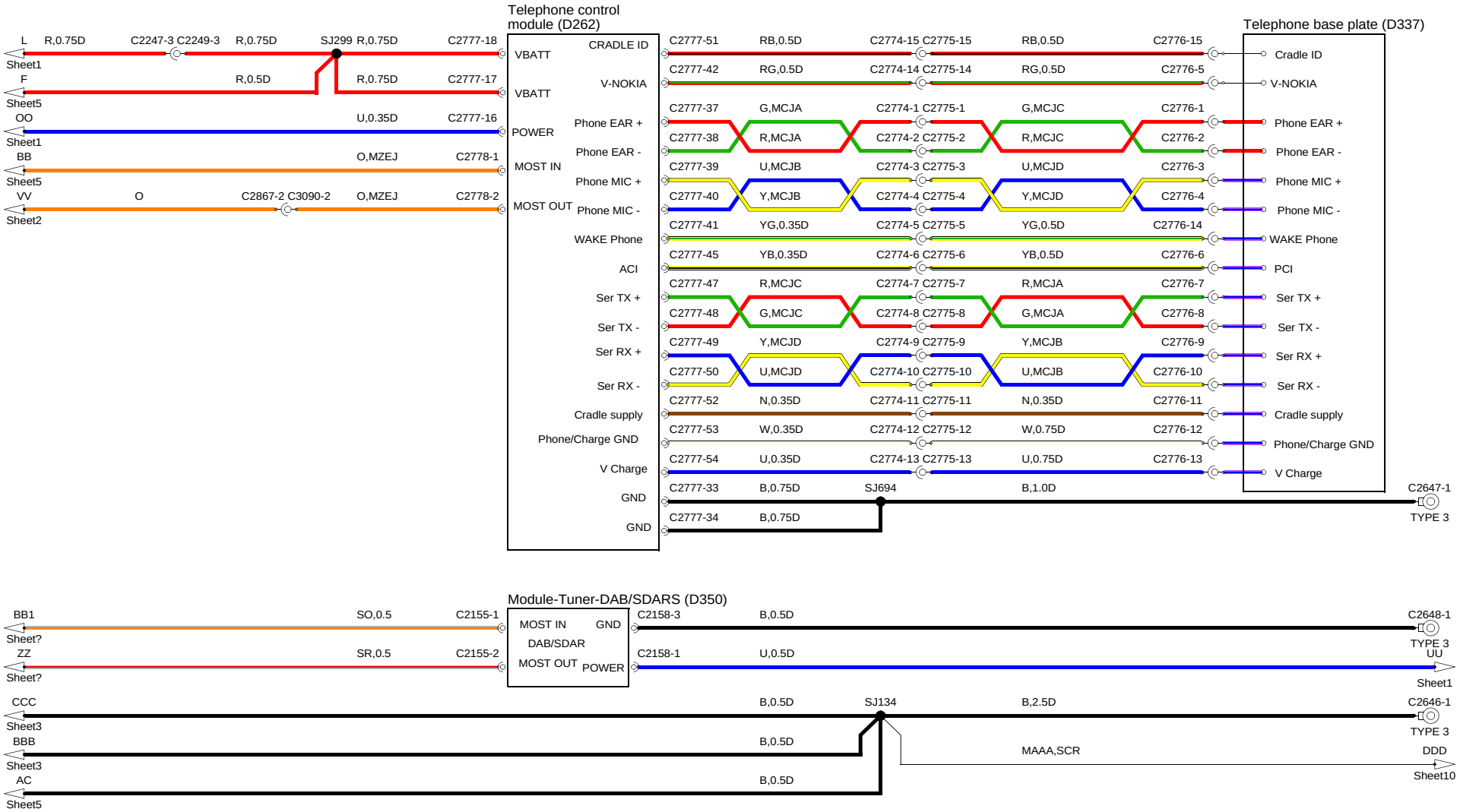
Telephone control module (D262)
Telephone base plate (D337)
L R,0.75D C2247-3 C2249-3 R,0.75D SJ299 R,0.75D C2777-18
Sheet1
F R,0.5D R,0.75D C2777-17
Sheet5
OO U,0.35D C2777-16
Sheet1
BB O,MZEJ C2778-1
Sheet5
VV O C2867-2 C3090-2 O,MZEJ C2778-2
Sheet2
VBATT
VBATT
POWER
MOST IN
MOST OUT
CRADLE ID
V-NOKIA
Phone EAR +
Phone EAR -
Phone MIC +
Phone MIC -
WAKE Phone
ACI
Ser TX +
Ser TX -
Ser RX +
Ser RX -
Cradle supply
Phone/Charge GND
V Charge
GND
GND
C2777-51 RB,0.5D C2774-15 C2775-15 RB,0.5D C2776-15
C2777-42 RG,0.5D C2774-14 C2775-14 RG,0.5D C2776-5
C2777-37 G,MCJA C2774-1 C2775-1 G,MCJC C2776-1
C2777-38 R,MCJA C2774-2 C2775-2 R,MCJC C2776-2
C2777-39 U,MCJB C2774-3 C2775-3 U,MCJD C2776-3
C2777-40 Y,MCJB C2774-4 C2775-4 Y,MCJD C2776-4
C2777-41 YG,0.35D C2774-5 C2775-5 YG,0.5D C2776-14
C2777-45 YB,0.35D C2774-6 C2775-6 YB,0.5D C2776-6
C2777-47 R,MCJC C2774-7 C2775-7 R,MCJA C2776-7
C2777-48 G,MCJC C2774-8 C2775-8 G,MCJA C2776-8
C2777-49 Y,MCJD C2774-9 C2775-9 Y,MCJB C2776-9
C2777-50 U,MCJD C2774-10 C2775-10 U,MCJB C2776-10
C2777-52 N,0.35D C2774-11 C2775-11 N,0.35D C2776-11
C2777-53 W,0.35D C2774-12 C2775-12 W,0.75D C2776-12
C2777-54 U,0.35D C2774-13 C2775-13 U,0.75D C2776-13
C2777-33 B,0.75D SJ694 B,1.0D
C2777-34 B,0.75D
Cradle ID
V-NOKIA
Phone EAR +
Phone EAR -
Phone MIC +
Phone MIC -
WAKE Phone
PCI
Ser TX +
Ser TX -
Ser RX +
Ser RX -
Cradle supply
Phone/Charge GND
V Charge
C2647-1
TYPE 3
Module-Tuner-DAB/SDARS (D350)
BB1 SO,0.5 C2155-1
Sheet?
ZZ SR,0.5 C2155-2
Sheet?
MOST IN
DAB/SDAR
MOST OUT
GND
POWER
C2158-3 B,0.5D
C2158-1 U,0.5D
C2648-1
TYPE 3
UU
Sheet1
CCC B,0.5D SJ134 B,2.5D
Sheet3
BBB B,0.5D
Sheet3
AC B,0.5D
Sheet5
MAAA,SCR
C2646-1
TYPE 3
DDD
Sheet10

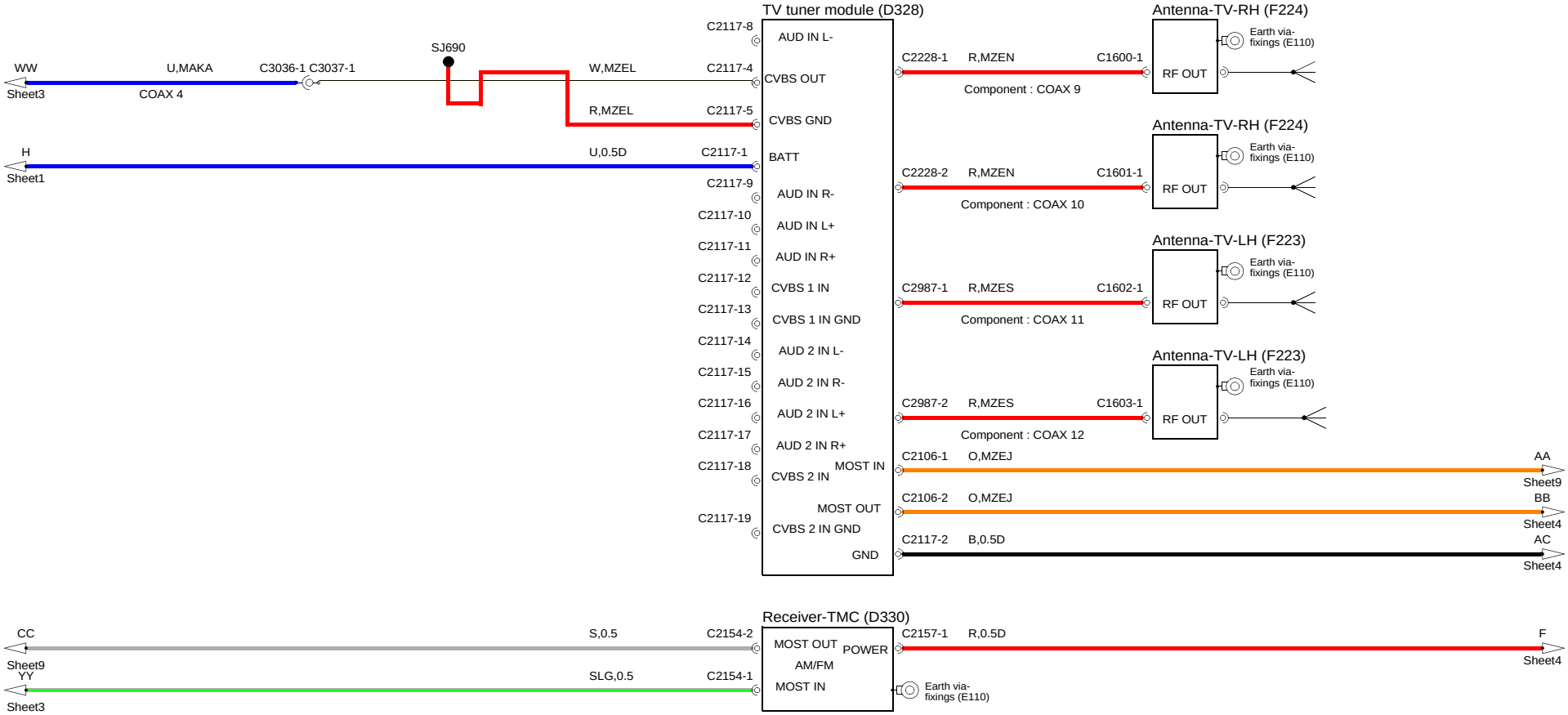
TV tuner module (D328)
Antenna-TV-RH (F224)
Antenna-TV-RH (F224)
Antenna-TV-LH (F223)
Antenna-TV-LH (F223)
Receiver-TMC (D330)
WW
Sheet3
U,MAKA
COAX 4
C3036-1 C3037-1
SJ690
W,MZEL
R,MZEL
H
Sheet1
U,0.5D
C2117-1
C2117-4
C2117-5
C2117-8
C2117-9
C2117-10
C2117-11
C2117-12
C2117-13
C2117-14
C2117-15
C2117-16
C2117-17
C2117-18
C2117-19
AUD IN L-
CVBS OUT
CVBS GND
BATT
AUD IN R-
AUD IN L+
AUD IN R+
CVBS 1 IN
CVBS 1 IN GND
AUD 2 IN L-
AUD 2 IN R-
AUD 2 IN L+
AUD 2 IN R+
MOST IN
CVBS 2 IN
MOST OUT
CVBS 2 IN GND
GND
C2228-1
R,MZEN
C1600-1
Component : COAX 9
C2228-2
R,MZEN
C1601-1
Component : COAX 10
C2987-1
R,MZES
C1602-1
Component : COAX 11
C2987-2
R,MZES
C1603-1
Component : COAX 12
RF OUT
Earth via-fixings (E110)
C2106-1
O,MZEJ
AA
Sheet9
C2106-2
O,MZEJ
BB
Sheet4
C2117-2
B,0.5D
AC
Sheet4
CC
Sheet9
S,0.5
C2154-2
YY
Sheet3
SLG,0.5
C2154-1
MOST OUT
AM/FM
MOST IN
POWER
C2157-1
R,0.5D
F
Sheet4

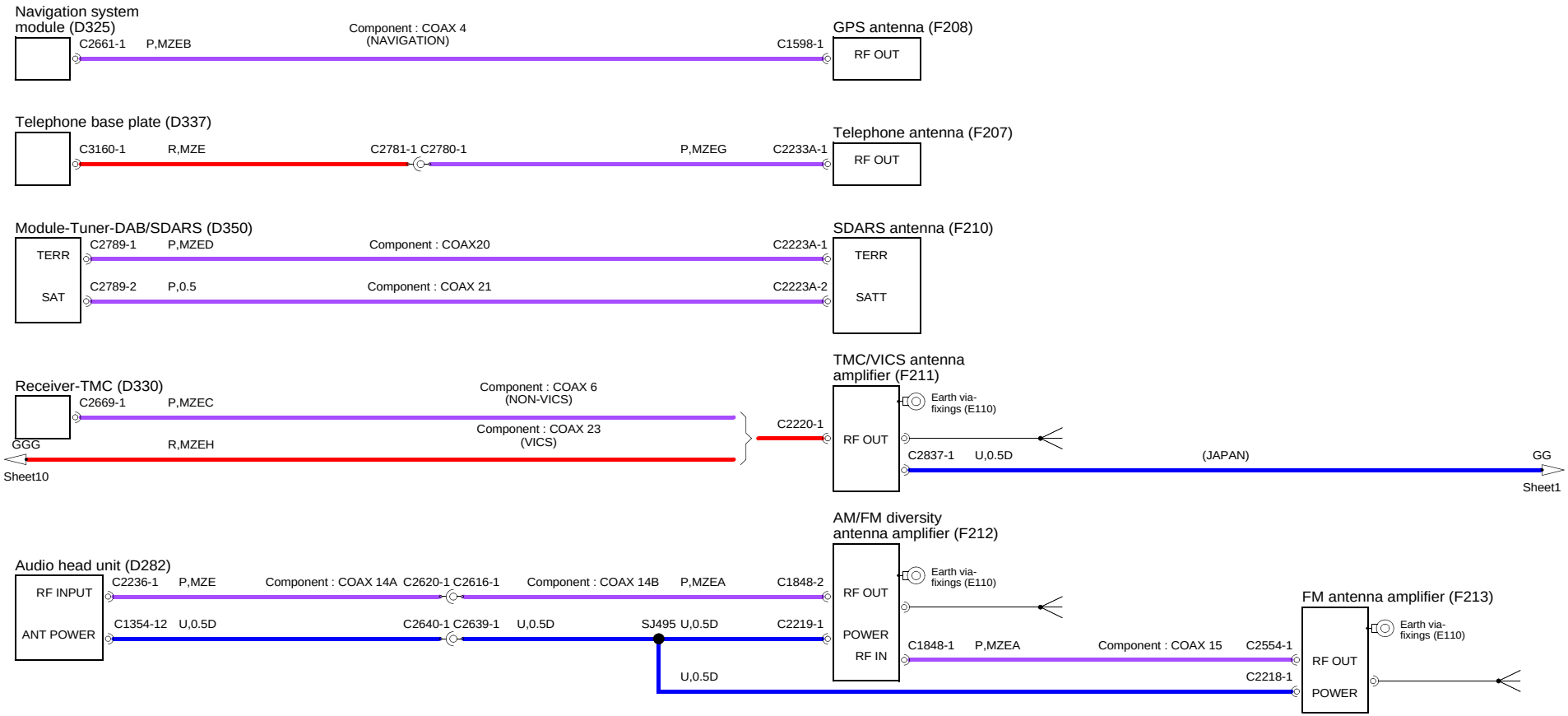
Navigation system module (D325)
C2661-1
P,MZEB
Component : COAX 4 (NAVIGATION)
C1598-1
GPS antenna (F208)
RF OUT
Telephone base plate (D337)
C3160-1
R,MZE
C2781-1 C2780-1
P,MZEG
C2233A-1
Telephone antenna (F207)
RF OUT
Module-Tuner-DAB/SDARS (D350)
TERR
SAT
C2789-1
P,MZED
Component : COAX20
C2223A-1
C2789-2
P,0.5
Component : COAX 21
C2223A-2
SDARS antenna (F210)
TERR
SATT
Receiver-TMC (D330)
C2669-1
P,MZEC
Component : COAX 6 (NON-VICS)
GGG
R,MZEH
Component : COAX 23 (VICS)
Sheet10
C2220-1
TMC/VICS antenna amplifier (F211)
RF OUT
Earth via-fixings (E110)
C2837-1
U,0.5D
(JAPAN)
GG
Sheet1
Audio head unit (D282)
RF INPUT
ANT POWER
C2236-1
P,MZE
Component : COAX 14A
C2620-1 C2616-1
Component : COAX 14B
P,MZEA
C1848-2
C1354-12
U,0.5D
C2640-1 C2639-1
U,0.5D
SJ495
U,0.5D
C2219-1
U,0.5D
AM/FM diversity antenna amplifier (F212)
RF OUT
POWER
RF IN
Earth via-fixings (E110)
C1848-1
P,MZEA
Component : COAX 15
C2554-1
C2218-1
FM antenna amplifier (F213)
RF OUT
POWER
Earth via-fixings (E110)

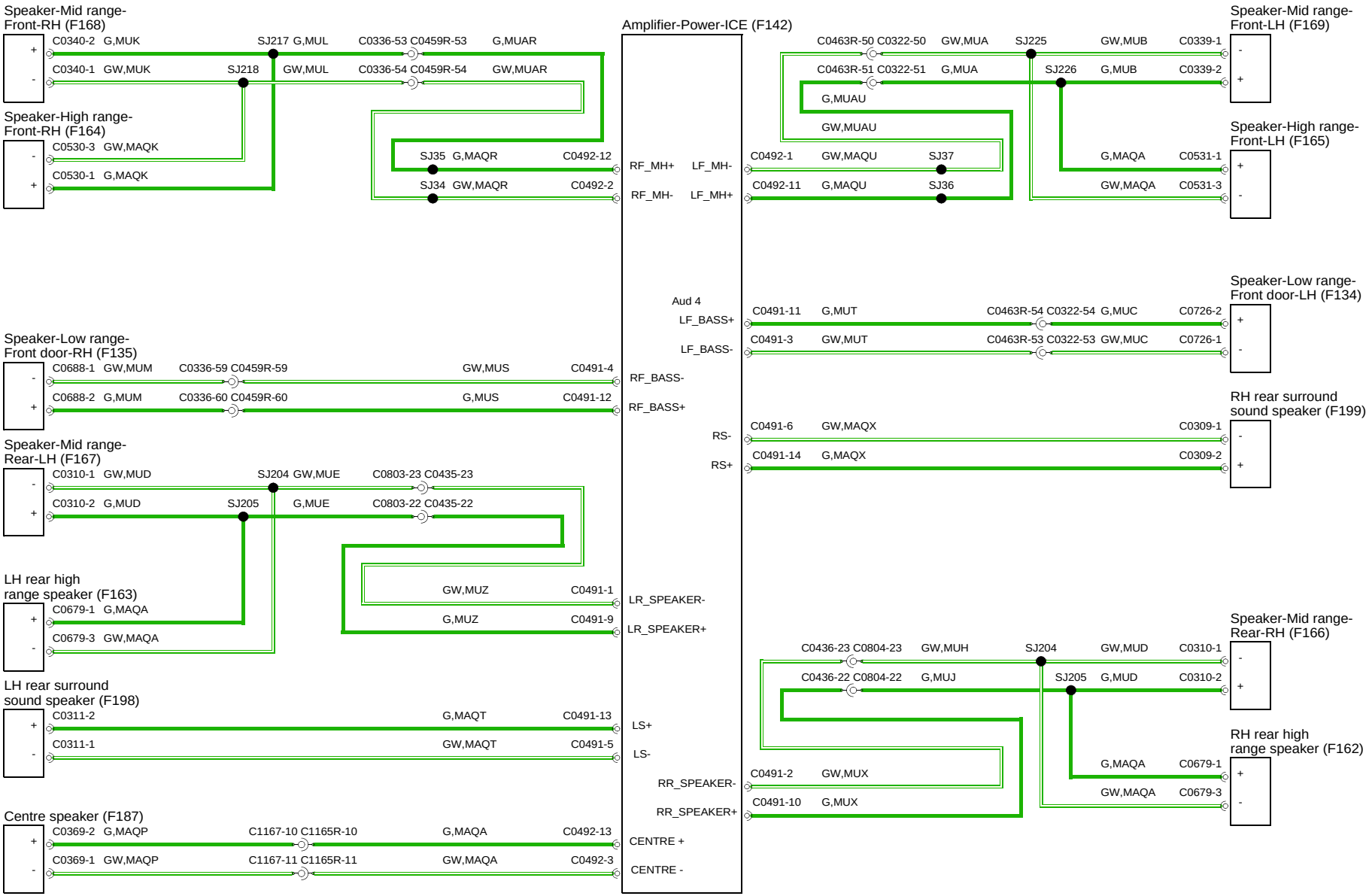
Speaker-Mid range-
Front-RH (F168)
C0340-2 G,MUK
SJ217 G,MUL
C0336-53 C0459R-53
G,MUAR
C0340-1 GW,MUK
SJ218
GW,MUL
C0336-54 C0459R-54
GW,MUAR
Speaker-High range-
Front-RH (F164)
C0530-3 GW,MAQK
C0530-1 G,MAQK
SJ35 G,MAQR
C0492-12
SJ34 GW,MAQR
C0492-2
Amplifier-Power-ICE (F142)
RF_MH+
LF_MH-
RF_MH-
LF_MH+
C0463R-50 C0322-50 GW,MUA
SJ225
GW,MUB
C0339-1
C0463R-51 C0322-51 G,MUA
SJ226
G,MUB
C0339-2
G,MUAU
GW,MUAU
C0492-1 GW,MAQU
SJ37
C0492-11 G,MAQU
SJ36
Speaker-Mid range-
Front-LH (F169)
Speaker-High range-
Front-LH (F165)
G,MAQA
C0531-1
GW,MAQA
C0531-3
Aud 4
LF_BASS+
LF_BASS-
C0491-11 G,MUT
C0463R-54 C0322-54 G,MUC
C0726-2
C0491-3 GW,MUT
C0463R-53 C0322-53 GW,MUC
C0726-1
Speaker-Low range-
Front door-LH (F134)
Speaker-Low range-
Front door-RH (F135)
C0688-1 GW,MUM
C0336-59 C0459R-59
GW,MUS
C0491-4
RF_BASS-
C0688-2 G,MUM
C0336-60 C0459R-60
G,MUS
C0491-12
RF_BASS+
RS-
RS+
C0491-6 GW,MAQX
C0309-1
C0491-14 G,MAQX
C0309-2
RH rear surround
sound speaker (F199)
Speaker-Mid range-
Rear-LH (F167)
C0310-1 GW,MUD
SJ204 GW,MUE
C0803-23 C0435-23
C0310-2 G,MUD
SJ205
G,MUE
C0803-22 C0435-22
LH rear high
range speaker (F163)
C0679-1 G,MAQA
C0679-3 GW,MAQA
GW,MUZ
C0491-1
LR_SPEAKER-
G,MUZ
C0491-9
LR_SPEAKER+
LH rear surround
sound speaker (F198)
C0311-2
G,MAQT
C0491-13
LS+
C0311-1
GW,MAQT
C0491-5
LS-
RR_SPEAKER-
RR_SPEAKER+
C0491-2 GW,MUX
C0491-10 G,MUX
C0436-23 C0804-23 GW,MUH
SJ204
GW,MUD
C0310-1
C0436-22 C0804-22 G,MUJ
SJ205
G,MUD
C0310-2
Speaker-Mid range-
Rear-RH (F166)
RH rear high
range speaker (F162)
G,MAQA
C0679-1
GW,MAQA
C0679-3
Centre speaker (F187)
C0369-2 G,MAQP
C1167-10 C1165R-10
G,MAQA
C0492-13
CENTRE +
C0369-1 GW,MAQP
C1167-11 C1165R-11
GW,MAQA
C0492-3
CENTRE -

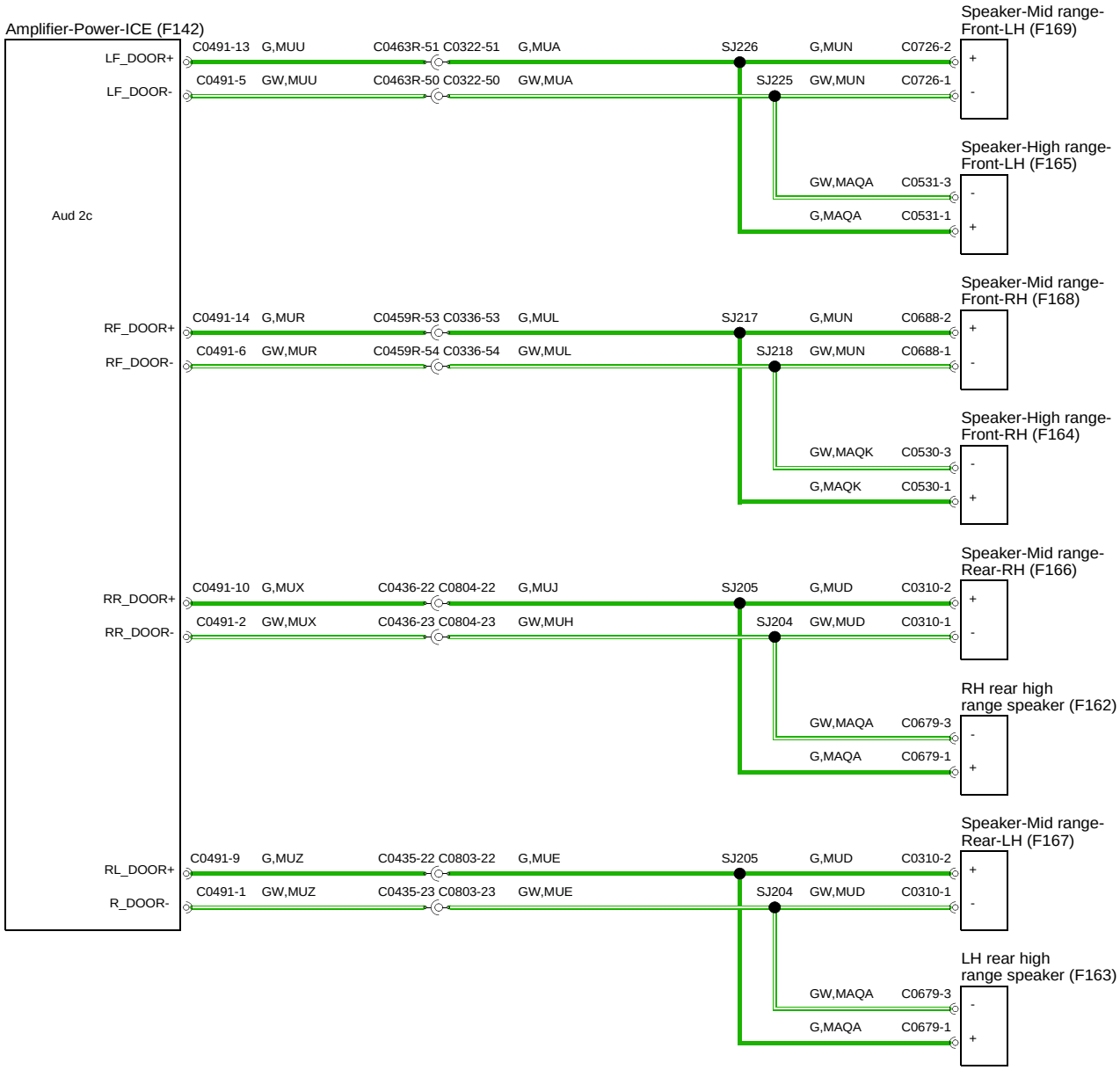
Amplifier-Power-ICE (F142)
Aud 2c
LF_DOOR+
LF_DOOR-
RF_DOOR+
RF_DOOR-
RR_DOOR+
RR_DOOR-
RL_DOOR+
R_DOOR-
C0491-13 G,MUU C0463R-51 C0322-51 G,MUA SJ226 G,MUN C0726-2
C0491-5 GW,MUU C0463R-50 C0322-50 GW,MUA SJ225 GW,MUN C0726-1
Speaker-Mid range-Front-LH (F169)
GW,MAQA C0531-3
G,MAQA C0531-1
Speaker-High range-Front-LH (F165)
C0491-14 G,MUR C0459R-53 C0336-53 G,MUL SJ217 G,MUN C0688-2
C0491-6 GW,MUR C0459R-54 C0336-54 GW,MUL SJ218 GW,MUN C0688-1
Speaker-Mid range-Front-RH (F168)
GW,MAQK C0530-3
G,MAQK C0530-1
Speaker-High range-Front-RH (F164)
C0491-10 G,MUX C0436-22 C0804-22 G,MUJ SJ205 G,MUD C0310-2
C0491-2 GW,MUX C0436-23 C0804-23 GW,MUH SJ204 GW,MUD C0310-1
Speaker-Mid range-Rear-RH (F166)
GW,MAQA C0679-3
G,MAQA C0679-1
RH rear high range speaker (F162)
C0491-9 G,MUZ C0435-22 C0803-22 G,MUE SJ205 G,MUD C0310-2
C0491-1 GW,MUZ C0435-23 C0803-23 GW,MUE SJ204 GW,MUD C0310-1
Speaker-Mid range-Rear-LH (F167)
GW,MAQA C0679-3
G,MAQA C0679-1
LH rear high range speaker (F163)

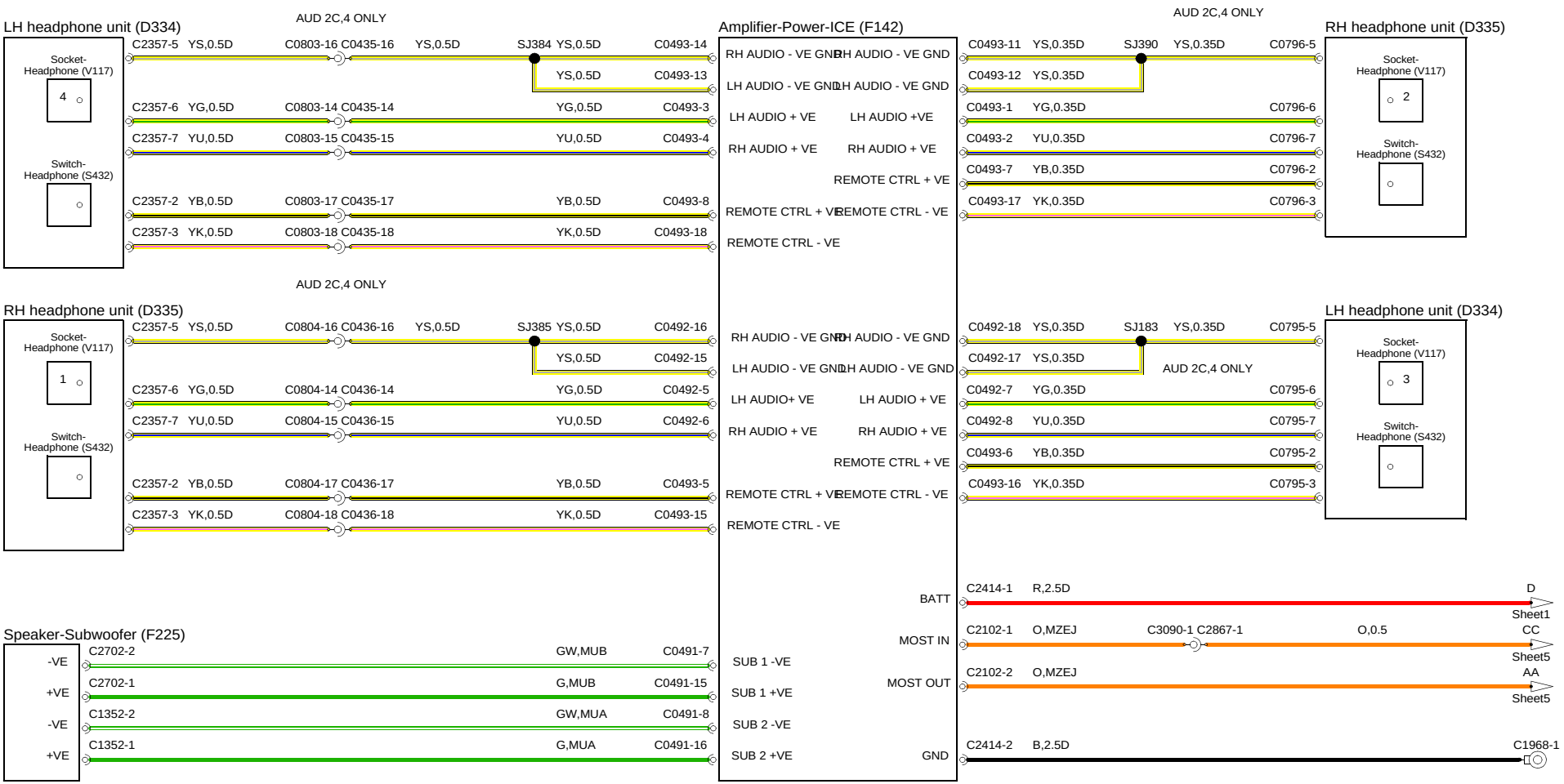
LH headphone unit (D334)
Socket-Headphone (V117)
4
Switch-Headphone (S432)
AUD 2C,4 ONLY
C2357-5 YS,0.5D C0803-16 C0435-16 YS,0.5D SJ384 YS,0.5D C0493-14
YS,0.5D C0493-13
C2357-6 YG,0.5D C0803-14 C0435-14 YG,0.5D C0493-3
C2357-7 YU,0.5D C0803-15 C0435-15 YU,0.5D C0493-4
C2357-2 YB,0.5D C0803-17 C0435-17 YB,0.5D C0493-8
C2357-3 YK,0.5D C0803-18 C0435-18 YK,0.5D C0493-18
Amplifier-Power-ICE (F142)
RH AUDIO - VE GND
RH AUDIO - VE GND
LH AUDIO - VE GND
LH AUDIO - VE GND
LH AUDIO + VE
LH AUDIO +VE
RH AUDIO + VE
RH AUDIO + VE
REMOTE CTRL + VE
REMOTE CTRL + VE
REMOTE CTRL - VE
REMOTE CTRL - VE
AUD 2C,4 ONLY
C0493-11 YS,0.35D SJ390 YS,0.35D C0796-5
C0493-12 YS,0.35D
C0493-1 YG,0.35D C0796-6
C0493-2 YU,0.35D C0796-7
C0493-7 YB,0.35D C0796-2
C0493-17 YK,0.35D C0796-3
RH headphone unit (D335)
Socket-Headphone (V117)
2
Switch-Headphone (S432)
RH headphone unit (D335)
Socket-Headphone (V117)
1
Switch-Headphone (S432)
AUD 2C,4 ONLY
C2357-5 YS,0.5D C0804-16 C0436-16 YS,0.5D SJ385 YS,0.5D C0492-16
YS,0.5D C0492-15
C2357-6 YG,0.5D C0804-14 C0436-14 YG,0.5D C0492-5
C2357-7 YU,0.5D C0804-15 C0436-15 YU,0.5D C0492-6
C2357-2 YB,0.5D C0804-17 C0436-17 YB,0.5D C0493-5
C2357-3 YK,0.5D C0804-18 C0436-18 YK,0.5D C0493-15
RH AUDIO - VE GND
RH AUDIO - VE GND
LH AUDIO - VE GND
LH AUDIO - VE GND
LH AUDIO+ VE
LH AUDIO + VE
RH AUDIO + VE
RH AUDIO + VE
REMOTE CTRL + VE
REMOTE CTRL + VE
REMOTE CTRL - VE
REMOTE CTRL - VE
C0492-18 YS,0.35D SJ183 YS,0.35D C0795-5
C0492-17 YS,0.35D
AUD 2C,4 ONLY
C0492-7 YG,0.35D C0795-6
C0492-8 YU,0.35D C0795-7
C0493-6 YB,0.35D C0795-2
C0493-16 YK,0.35D C0795-3
LH headphone unit (D334)
Socket-Headphone (V117)
3
Switch-Headphone (S432)
Speaker-Subwoofer (F225)
-VE
+VE
-VE
+VE
C2702-2 GW,MUB C0491-7
C2702-1 G,MUB C0491-15
C1352-2 GW,MUA C0491-8
C1352-1 G,MUA C0491-16
SUB 1 -VE
SUB 1 +VE
SUB 2 -VE
SUB 2 +VE
BATT
MOST IN
MOST OUT
GND
C2414-1 R,2.5D D
Sheet1
C2102-1 O,MZEJ C3090-1 C2867-1 O,0.5 CC
Sheet5
C2102-2 O,MZEJ AA
Sheet5
C2414-2 B,2.5D C1968-1

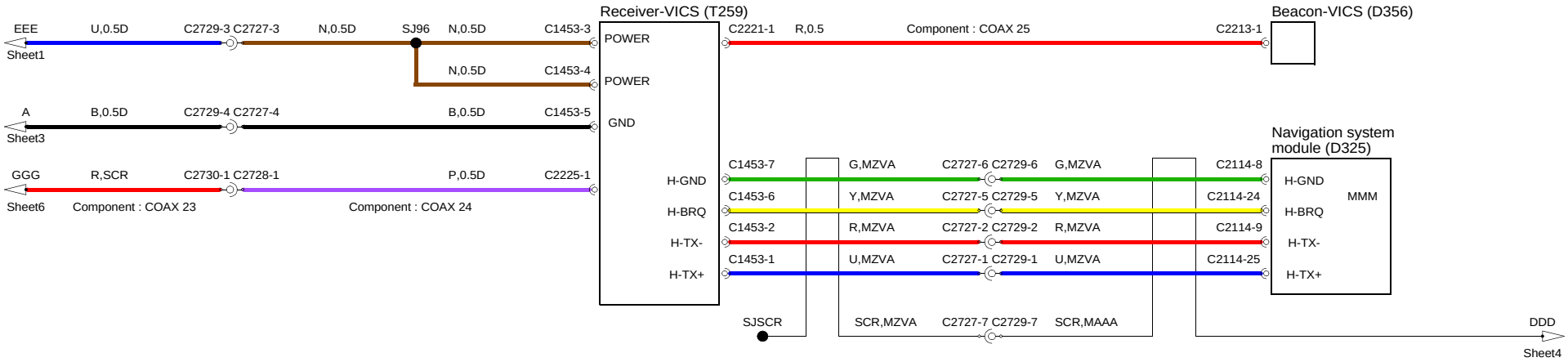
Receiver-VICS (T259)
Beacon-VICS (D356)
Navigation system module (D325)
EEE
U,0.5D
C2729-3 C2727-3
N,0.5D
SJ96
N,0.5D
C1453-3
POWER
Sheet1
N,0.5D
C1453-4
POWER
A
B,0.5D
C2729-4 C2727-4
B,0.5D
C1453-5
GND
Sheet3
GGG
R,SCR
C2730-1 C2728-1
P,0.5D
C2225-1
Sheet6
Component : COAX 23
Component : COAX 24
C2221-1
R,0.5
Component : COAX 25
C2213-1
H-GND
H-BRQ
H-TX-
H-TX+
C1453-7
G,MZVA
C2727-6 C2729-6
G,MZVA
C2114-8
C1453-6
Y,MZVA
C2727-5 C2729-5
Y,MZVA
C2114-24
C1453-2
R,MZVA
C2727-2 C2729-2
R,MZVA
C2114-9
C1453-1
U,MZVA
C2727-1 C2729-1
U,MZVA
C2114-25
MMM
SJSCR
SCR,MZVA
C2727-7 C2729-7
SCR,MAAA
DDD
Sheet4